Wireless Sensor Networks for Applications In and Around Buildings

William M. Healy
Heat Transfer & Alternative Energy Systems Group
Building Environment Division

Outline

- Principles of Wireless Sensor Networks
- Applications of Wireless Sensor Networks
- Sensor Network Topologies
- Experiences with Wireless Sensor Networks
- Current work
- Conclusions

What are Wireless Sensor Networks?

- Wireless
  - Data transmission is wireless
  - Sensing mechanism not necessarily wireless
  - Power supply not necessarily wireless
- Sensor network
  - A set of sensors that blanket a region and provide information about that region
  - Processing at the sensor level

Wireless Technology

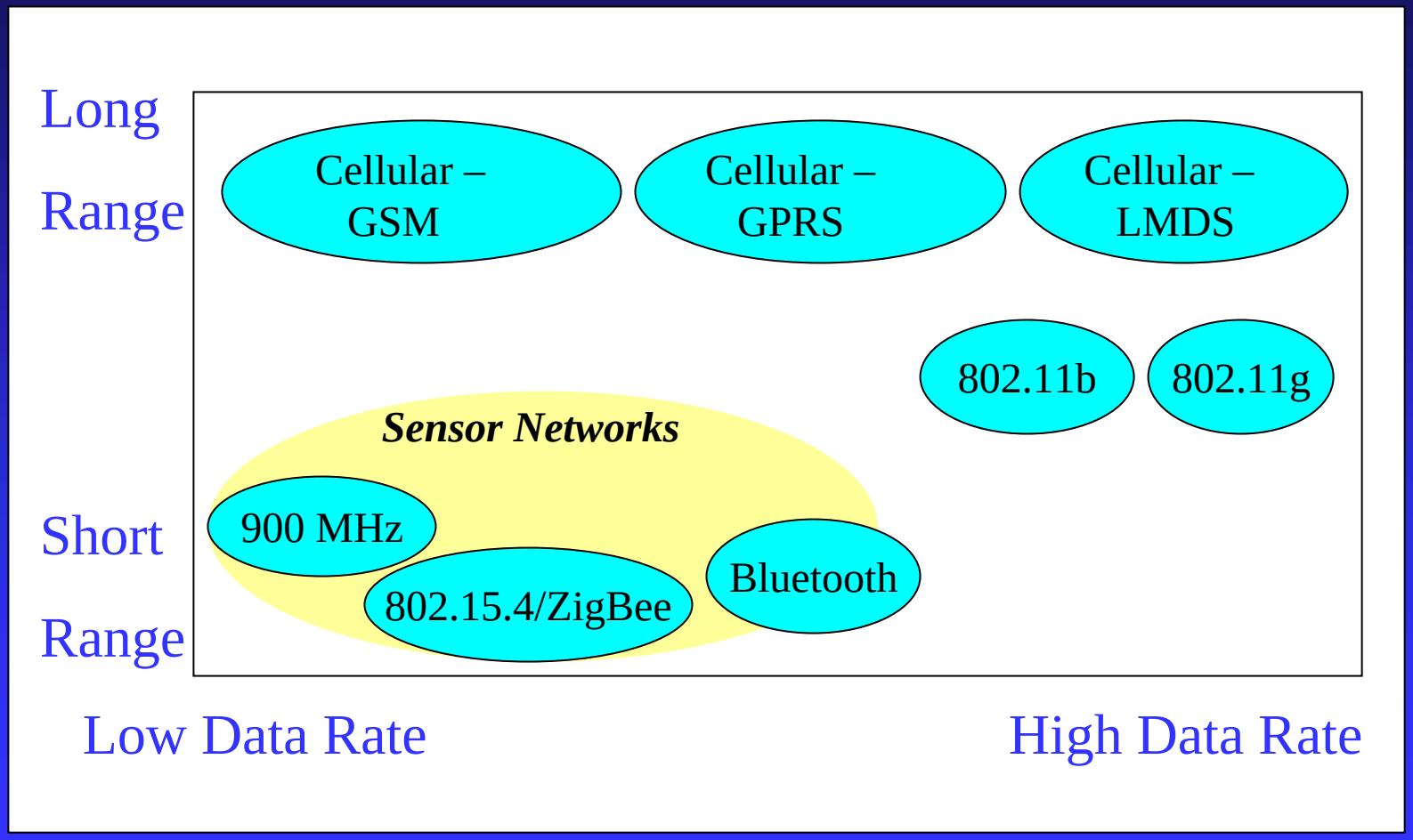

Adopted from *Wireless Sensor Networks*, Zhao and Gubias 2004

Wireless Technologies Design Criteria

- Cordless Phones, Cellular Phones
  - Quality of Service is paramount
- WiFi, wireless internet
  - Bandwidth is paramount
- Wireless sensors
  - Low energy consumption
    - Sensors expected to be deployed for long lengths of time with no human intervention
  - Low cost
    - A network is expected to involve a large number of sensors

Wireless Transmission

- Carrier Frequency Bands
  - ISM (Industrial, Scientific, and Medical)
    - 900 MHz, 2.4 GHz, 5.8 GHz
      - Lower frequency → greater distance, less attenuation
      - Higher frequency → greater bandwidth
      - 900 MHz only license-free in North America, Australia, and Israel
      - Other two bands are license-free worldwide

Outline

- Principles of Wireless Sensor Networks
- *Applications of Wireless Sensor Networks*
- Sensor Network Topologies
- Experiences with Wireless Sensor Networks
- Current work
- Conclusions

Application Areas

- Research
- Agriculture
- Environmental Monitoring
- Industrial Monitoring and SCADA
- Military
- Automotive

Building Applications

- Control purposes
- Retrofits
- Historical buildings
- Short-term monitoring
  - Building forensics
  - Commissioning
- Safety
- Transient spaces

Estimated wiring costs in buildings (*ASHRAE Journal, 2002*):

Existing construction: $2.20 per linear foot

New construction: $0.67 per linear foot

Flexibility

Markets

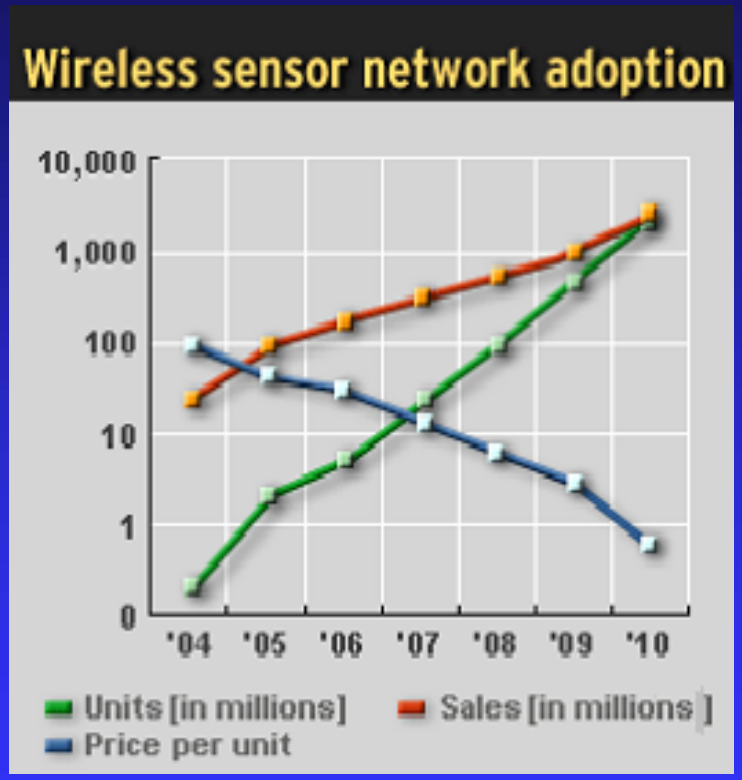

Source: CNET, 2004

Primary markets:

1) Defense

2) Industrial Monitoring

3) Building Automation

Outline

- Principles of Wireless Sensor Networks
- Applications of Wireless Sensor Networks
- *Sensor Network Topologies*
- Experiences with Wireless Sensor Networks
- Current work
- Conclusions

Star Networks (Point-to-Point)

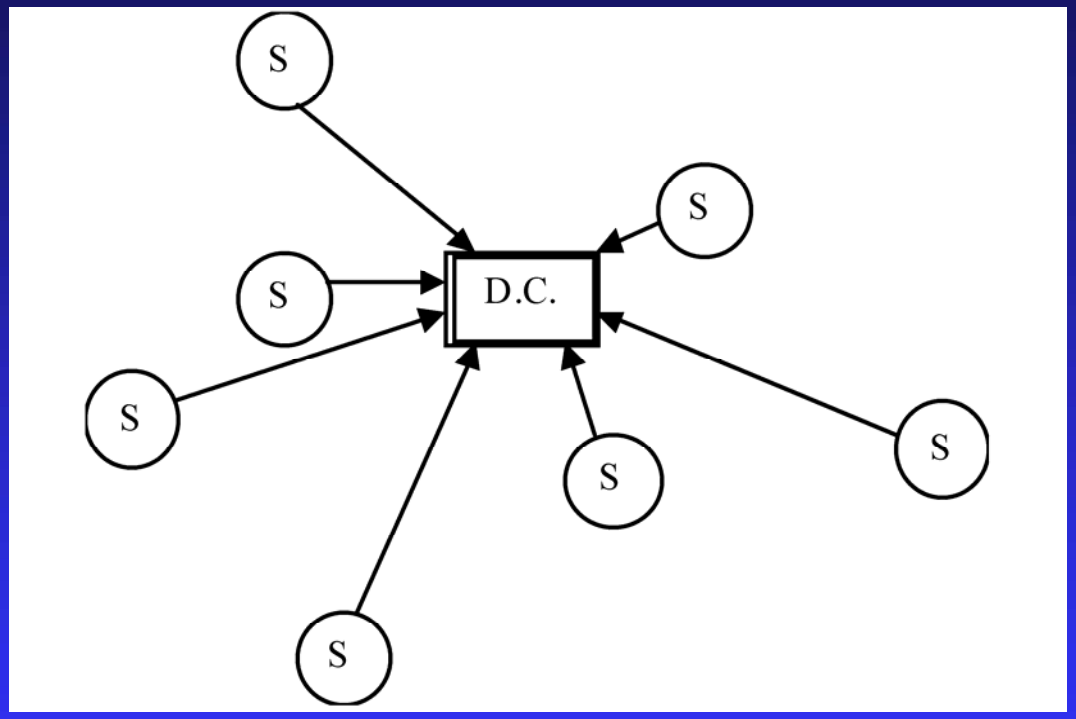

- All sensors transmitting directly with a central data collection point

Mesh Networks

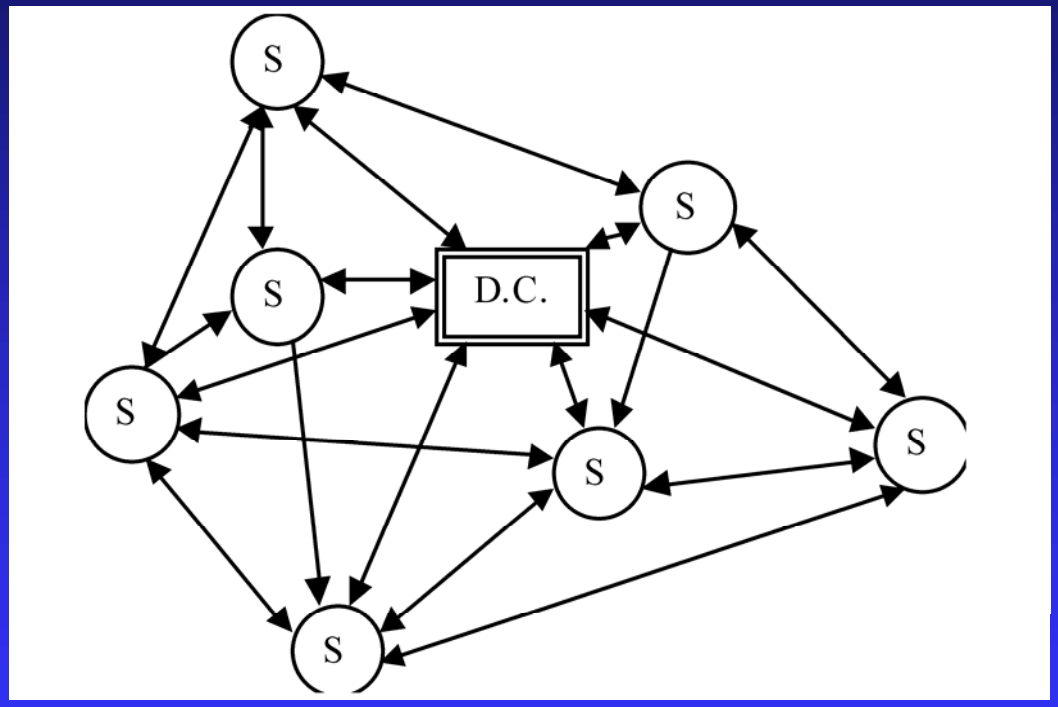

- Sensors can communicate with each other
- Internet model

Mesh Networks (cont.)

- Sensor nodes can relay messages from other sensor nodes
- No need for repeaters
- Software controls the flow of messages through network
- Messages can be confined to nodes
- Self-configuring, ad-hoc
- Self-healing
- New nodes automatically detected and incorporated

Mesh Networks – Pros and Cons

- Advantages
  - Robust
  - Easily deployed
    - No RF site surveys needed
    - No repeaters needed
  - Easily expanded
- Disadvantages
  - More complicated software
  - Battery consumption of nodes increased
    - Each node must transmit other nodes' messages as well as its own
  - Potentially less bandwidth

Choice of topologies

- Star networks

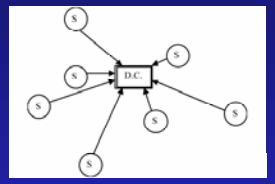

  - Less costly
  - Best used in benign RF environments, short distances (residential)
- Mesh networks

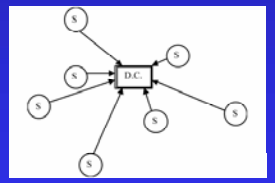

  - Easier to deploy
  - Best over large distances, harsh RF environments (commercial, industrial, outdoors)

Outline

- Principles of Wireless Sensor Networks
- Applications of Wireless Sensor Networks
- Sensor Network Topologies
- *Experiences with Wireless Sensor Networks*
- Current work
- Conclusions

Residential Installation

- Utilized mesh network hardware
- Mission:
  - Monitor heat pump performance
  - Monitor hot water consumption and energy consumption of water heater
  - Monitor hygrothermal conditions of wall

Sensor Node Locations

- Sensors placed throughout 3 story townhouse
- Air handler, water heater, wall in utility room
- Heat pump power measured at breaker
- Outdoor temperatures recorded
- Indoor temperature taken on second floor
- Data collection on third floor

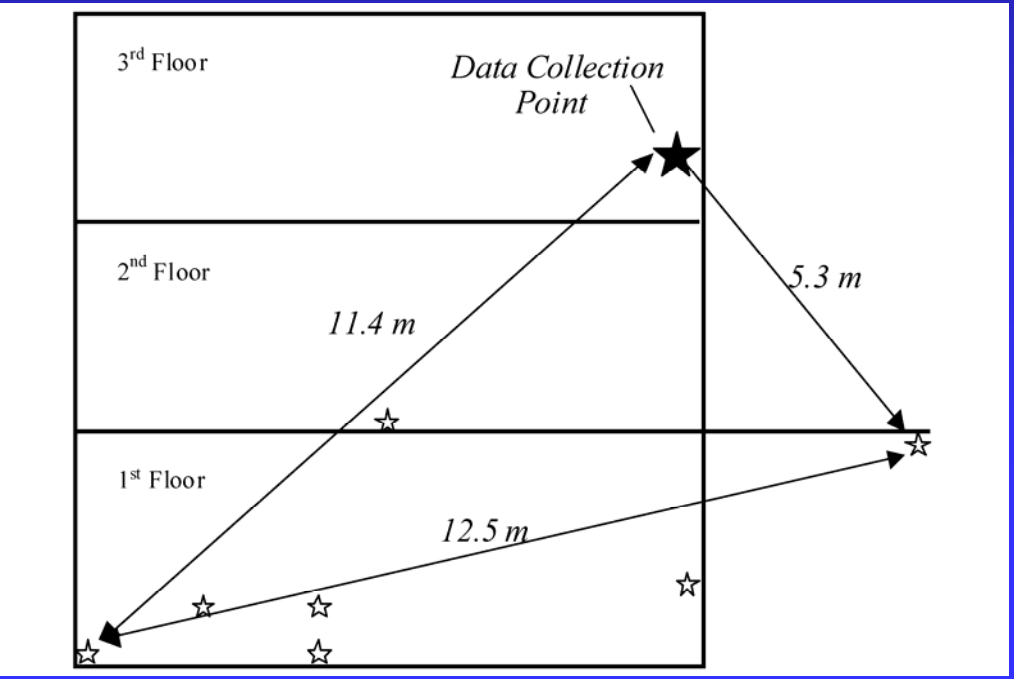

Hardware

- Radio node
  - Antenna
  - Radio
  - On-board microprocessor contains code for managing mesh network

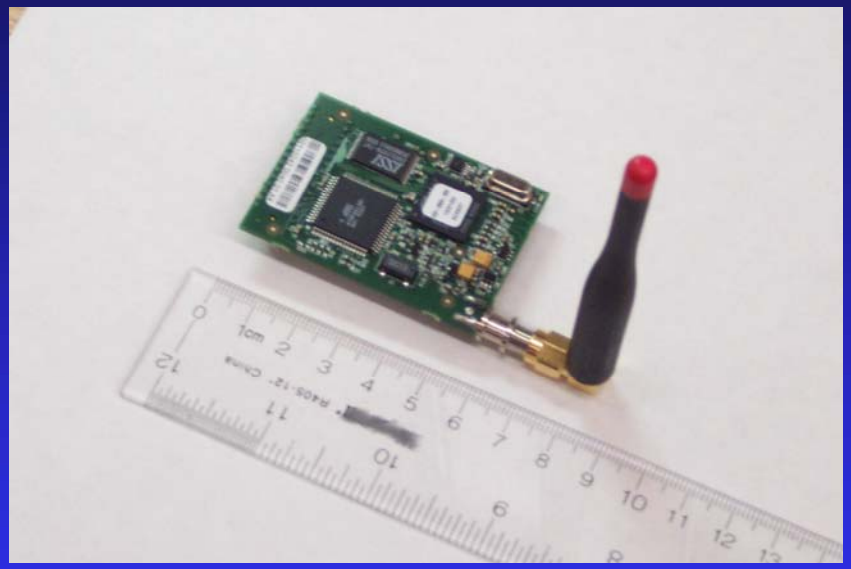

Hardware – Development Board

- Contains pins for sensor connection
- Contains microprocessor for handling signal (A/D, limited math operations, timing)
- Power supply
- Serial port
- Radio node plugs onto top of board

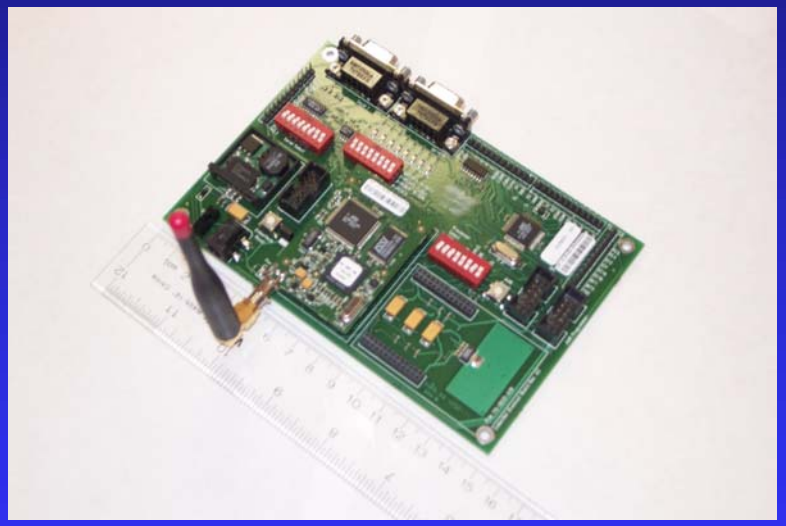

Hardware – Sensors & Power

- Each development board accepted 8 analog inputs, 2 interrupts
- One board served as gateway to computer
- Significant wiring still required
- Power – line power

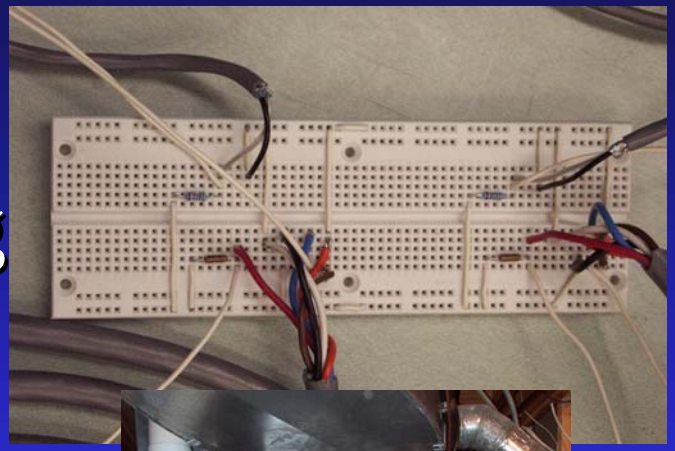

Software – on board

- Data acquisition
- Signal processing
- Embedded programming
- Embedded C language
- 4 kB of memory
- Message format up to user

Software – host processing

- Gateway streams text to computer

Data from HP:	-099.9	-099.9	-099.9	036.0	-099.9	-099.9	-099.9	-099.9
Data from ID:	025.7	025.3	051.3	-099.9	-099.9	-099.9	-099.9	-099.9
Data from HP:	-099.9	-099.9	-099.9	002.0	-099.9	-099.9	-099.9	-099.9
Data from OD:	024.4	180.9	061.1	-099.9	-099.9	-099.9	-099.9	-099.9
Data from ID:	025.7	025.3	051.3	-099.9	-099.9	-099.9	-099.9	-099.9
Data from HP:	-099.9	-099.9	-099.9	000.0	-099.9	-099.9	-099.9	-099.9
Data from M1:	063.4	021.9	064.1	017.0	060.2	023.3	061.8	022.6
Data from WH:	-001.0	-001.0	000.0	-001.0	-001.0	-099.9	-099.9	-099.9
Data from WP:	021.8	043.4	000.0	-099.9	-099.9	-099.9	-099.9	-099.9
Data from ID:	025.7	025.3	051.9	-099.9				
Data from AH:	023.1	023.6	063.7	002.0				

- Data must be parsed
- Application level programming

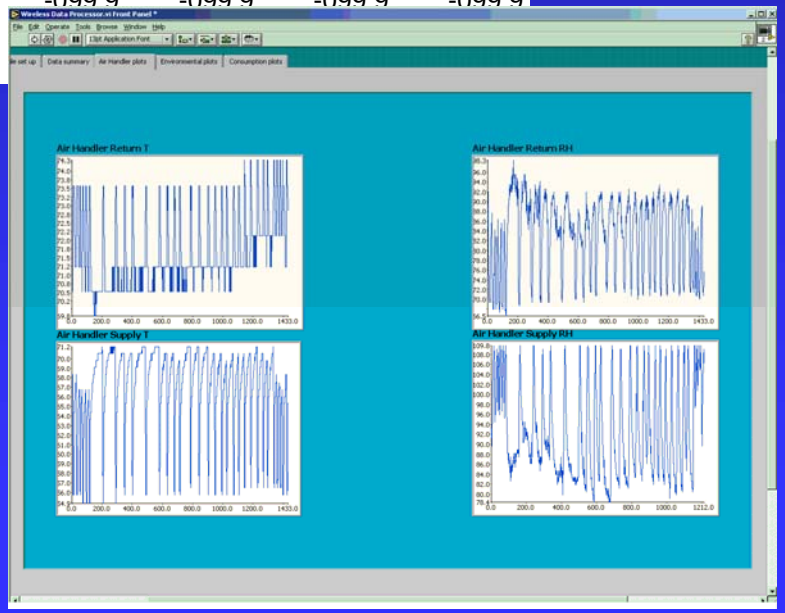

Monitoring

- Heat pump operation monitored for 2 months
- Network expanded to monitor water heater performance
- Network expanded a third time to monitor hygrothermal conditions of wall
  - Goal: Explore the ability to expand network

Lessons Learned

- Very easy to set up network
  - All nodes in network located
  - Additional nodes easily added to network
  - Installation was relatively quick and easy
- Unobtrusive

Lessons Learned

vs.

- Electrical power readily available in buildings, but battery power will be needed in many situations
  - Manufacturers aim for 10 year battery life
  - Currently, battery life with power management may be ~ 2 years
  - Work underway:
    - Battery technology
    - Power management
    - More processing at node → less transmission

Lessons Learned

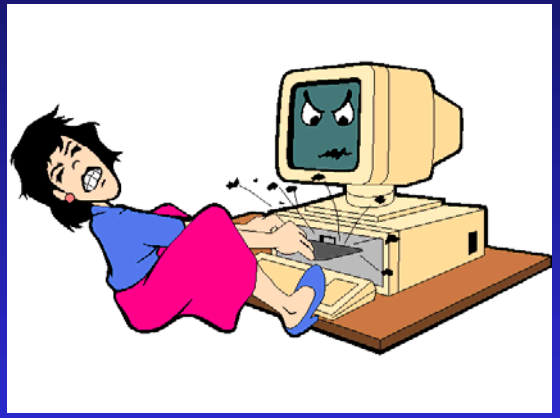

- Programming is a challenge
  - Embedded programming
  - Memory-constrained nodes
  - Hardware manipulation
- There is a need for integrated sensor suites
  - Very few options currently exist that integrate mesh networking hardware with sensors of interest for building monitoring

Lessons Learned

- Reliability questions

$$Availability \equiv \frac{\#\text{ of transmissions per day}}{\#\text{ of minutes per day}}$$

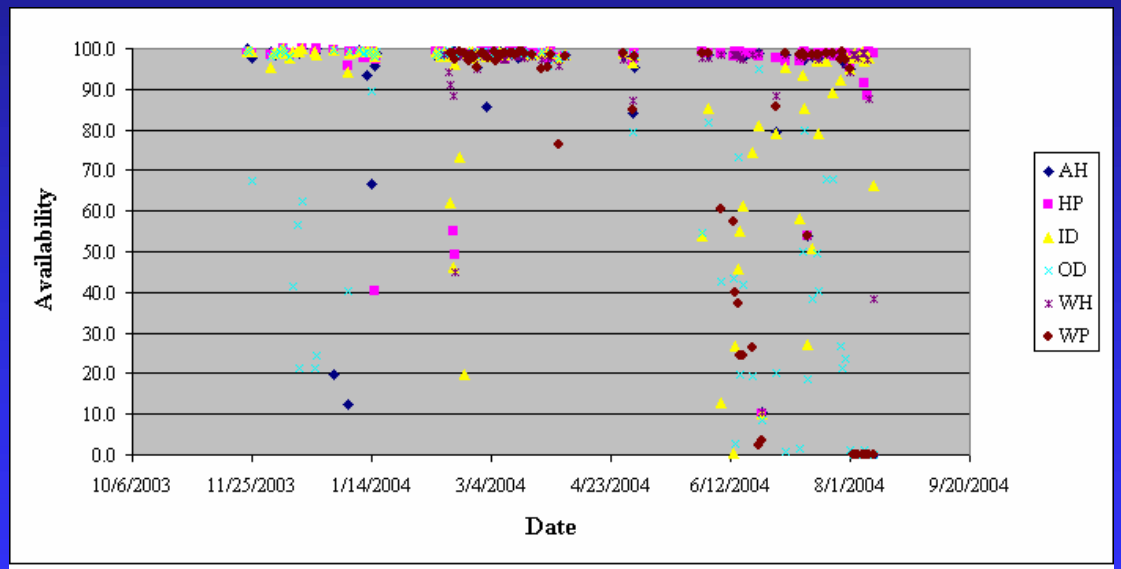

- Reliability degraded with time
- May be dependent upon programming

Lessons Learned

- Data transmission errors can be costly
- Time synchronization difficult at chip-level
- Identification protocol is up to user
- Security should not be overlooked

Sensor ID:	49879
Manufacturer:	Acme Sensor
Sensor Type:	Thermistor
Location:	roof
Calibration date:	1/5/2003
Sensor accuracy	5%

Outline

- Principles of Wireless Sensor Networks
- Applications of Wireless Sensor Networks
- Sensor Network Topologies
- Experiences with Wireless Sensor Networks
- *Current work*
- Conclusions

Data incorporation schemes

- Wireless sensors have eased the physical implementation of sensors
- But….incorporating these sensors into applications still requires a great deal of organization and attention to detail

What is needed?

- At minimum
  - Sensor location
  - Data
  - Measurement type
  - Date and time
- Other desirables
  - Sensor type
  - Calibration information
  - Battery level
  - Units
  - Damage status
  - Alarms

Existing Standards and Protocols

Radio Communications	Sensor Database Management
IEEE 802.11	TinyDB
IEEE 802.15.4	Cougar
Bluetooth	Diffusion
ZigBee	Directed Diffusion

Data Dialog	Building Automation
IEEE 1451	BACnet
SensorML	LonWorks
TinyML	

Questions being explored

- Do existing standards meet needs of building automation and monitoring communities?
- Can data from heterogeneous sensor networks be readily accessed by different applications?
- Can Web Services allow for greater adoption of sensor networks for meeting needs of building professionals?

Outline

- Principles of Wireless Sensor Networks
- Applications of Wireless Sensor Networks
- Sensor Network Topologies
- Experiences with Wireless Sensor Networks
- Current work
- *Conclusions*

Conclusions

- Wireless technology is greatly simplifying deployment of large sensor networks
- Mesh networking technology leads to robust sensor communication networks
- Still not ready for easy deployment
- Sensor data integration being investigated

Wireless Sensor Working Group

- An informal forum for NIST employees to share experiences with wireless sensors.

- Please contact me to get on mailing list

  william.healy@nist.gov

  x4922