Performance of a Thermal Load-Following Stationary Fuel Cell

Mark W. Davis, A. Hunter Fanney
Building and Fire Research Laboratory
National Institute of Standards and Technology

November 14-18, 2005
2005 Fuel Cell Seminar
Palm Springs, CA

Residential Fuel Cell Test Facility Project

Goal: Develop a rating methodology that allows consumers to judge the economic impact of a residential fuel cell system

- Test performance of residential-scale stationary fuel cell systems
- Create empirical performance model
- Draft a rating methodology
- Disseminate results
  - IEA Annex 42 - Simulation of Building-Integrated Fuel Cell and Other Cogeneration Systems
  - Fuel cell manufacturers
  - Research community

Why a Rating Methodology?

- Future consumers of residential fuel cell systems will need a means to evaluate the economic costs and benefits of these systems
- Nameplate ratings do not represent the full spectrum of conditions encountered in field
- Ambient temperature and load affect output of fuel cell systems, as seen from previous testing
- Rating methodology will use performance data from a minimal number of tests to extrapolate performance for typical application

Description of Rating Methodology

- Independent of fuel cell technology (PEM, SOFC, etc)
- Categorizes systems into four operational strategies
  - Electrical load following
  - Constant power output
  - Thermal load following
  - Water heating only
- Steady state tests used to determine part-load capacities of system
- Simulated use tests used to determine representative hourly performance under real conditions
- **Calculation procedure results in annualized electrical output, thermal energy delivery, and fuel consumption**

Schematic of Steady State Test

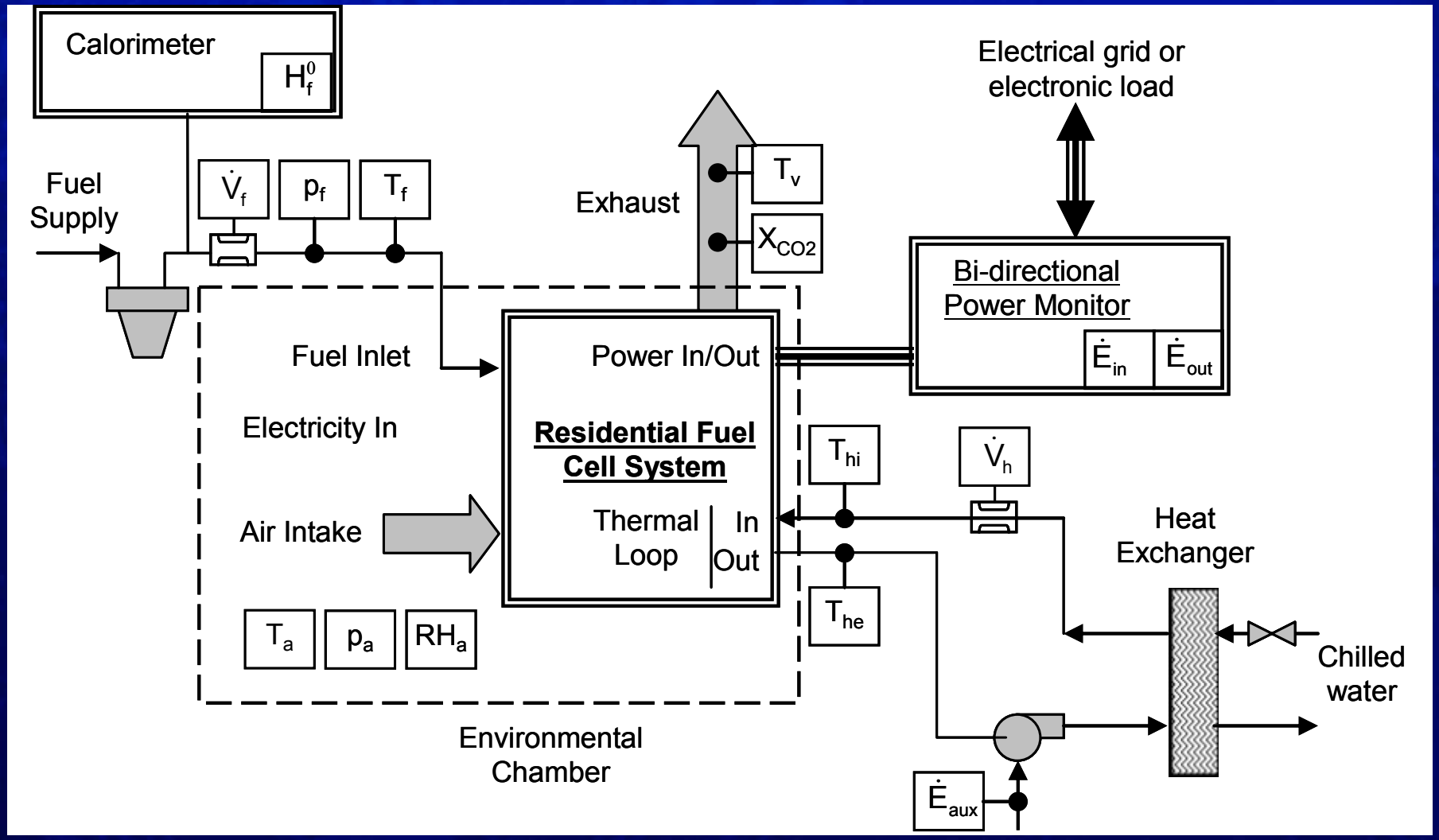

Schematic of Simulated Use Test

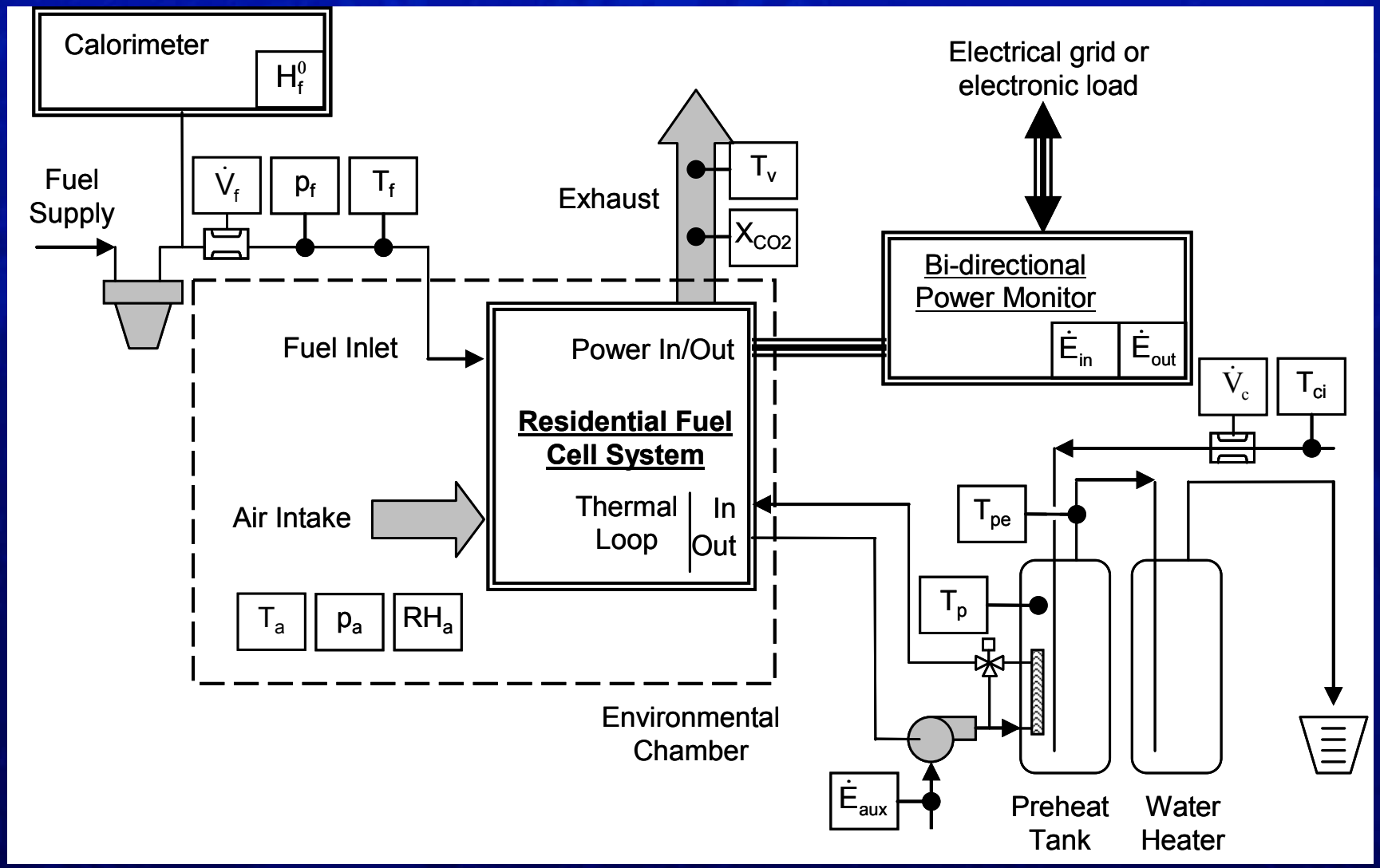

NIST Residential Fuel Cell Test Facility

- Measurements
  - Fuel energy consumption
  - Electrical energy generation
  - Thermal energy generation
  - Ambient conditions
- Controls
  - Ambient conditions
    - Temperature and humidity
  - Electrical Load
  - Thermal Load
    - Fluid temperature and flow rate
  - Simulated domestic hot water or space heating load

Fuel Energy Subsystem

Thermal Conditioning Loop

Performance Testing of Residential Fuel Cells

- **Completed testing of Plug Power Gensys 5c**
- Provides base load electrical power and thermal energy
- 5 kW electrical power
- >9 kW thermal power
- Fueled by natural gas
- Grid-interconnected or grid-independent

Performance Testing of Residential Fuel Cells

- **Currently installed in test facility**
- Thermal load-following
  - Electrical and thermal output decreases as fluid temperature rises
- 4.6 kW electrical power
- >8 kW thermal power
- Fueled by natural gas
- Grid-interconnected only

Theory of Operation: Thermal Load Following

- User inputs % of maximum fuel input
  - ~15% to 100%
- Unit requires cogeneration fluid flow
- Electrical and thermal output decreases as fluid temperature climbs over 50°C
- Operates at minimum output until fluid temperature reaches 60°C
- Unit enters “Idle” mode at fluid temperature greater than 60°C
  - Minimal gas usage maintains reactor temperature
- Unit restarts when fluid drops below 50°C

Tests Performed on Fuel Cell System

- Steady State Tests
  - Electrical load fraction
    - Vary maximum fuel use setpoint while holding ambient temperature and cogeneration fluid temperature and flow rate constant
  - Ambient temperature
    - Vary the ambient temperature while maintaining the electrical output and cogeneration fluid flow rate and temperature
  - Cogeneration fluid temperature
    - Vary cogeneration fluid temperature while holding electrical output and ambient temperature constant
    - Performed at 100%, 75%, 50%, and 25% of electrical output capacity

Tests Performed on Fuel Cell System

- Simulated Use Tests
  - Domestic hot water load
    - Subject fuel cell system to water draws as specified in DOE test procedure for water heaters
    - Draws 10.6 gallons at start of first six hours of test
    - 18 hours without water drawn from tank
  - Space heating load
    - Subject fuel cell system to space heating load seen by “typical” house in Atlanta, GA on peak heating day of the year
    - Load determined using EnergyPlus and US housing statistics from DOE Energy Information Agency
    - Hourly thermal load approximately 6 kWh

Electrical Load Fraction Tests

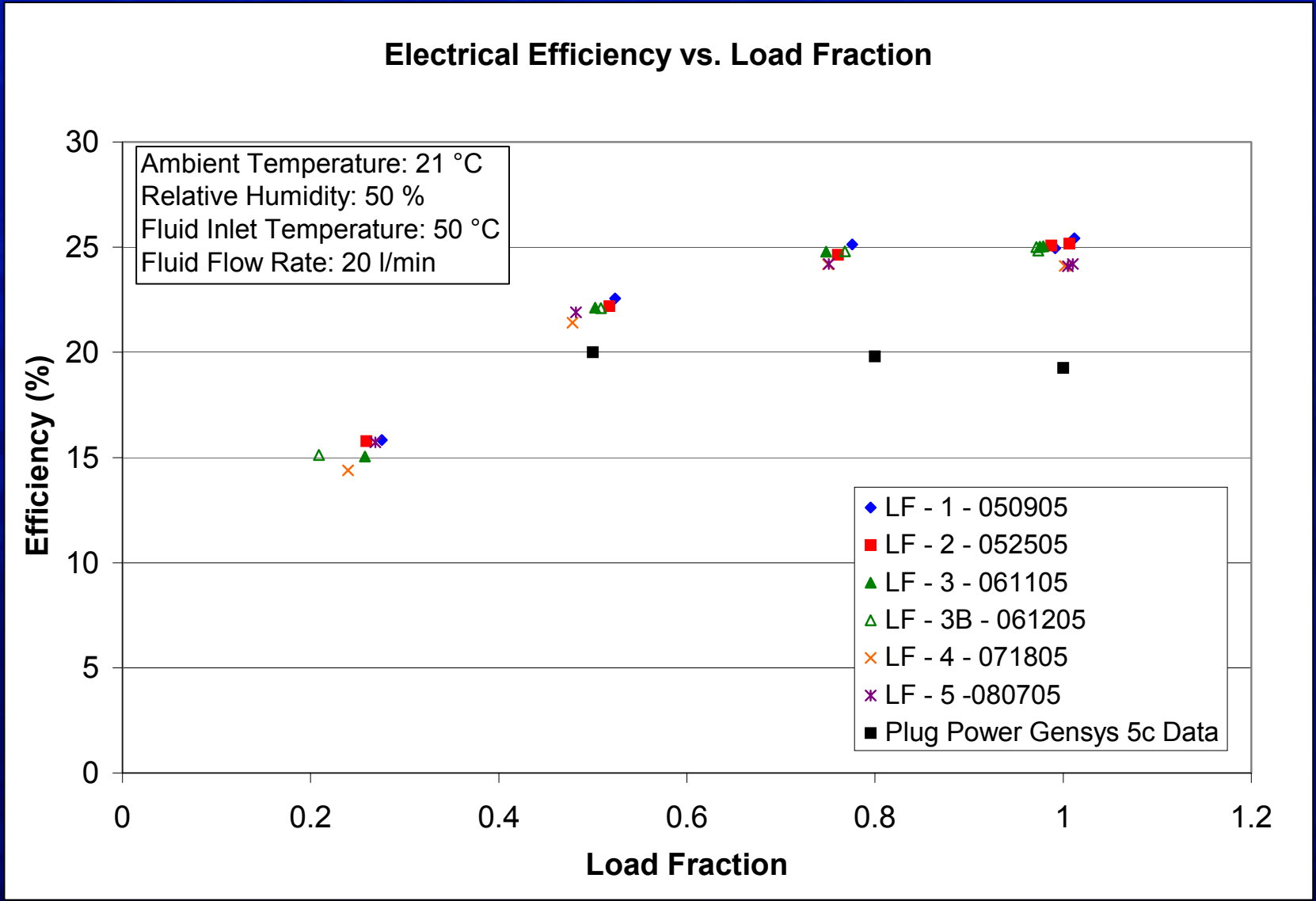

Electrical Load Fraction Tests

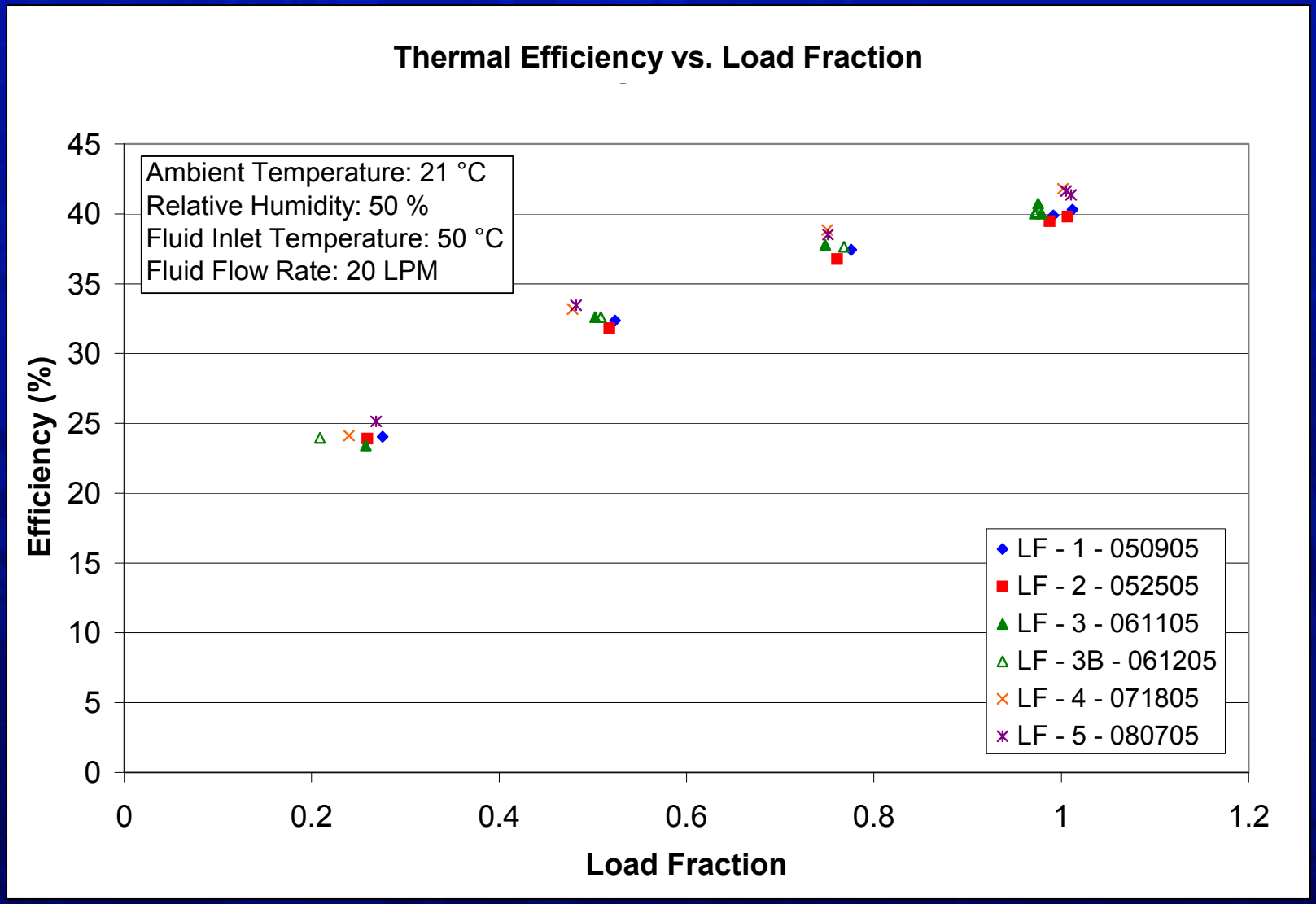

Electrical Efficiency Degradation

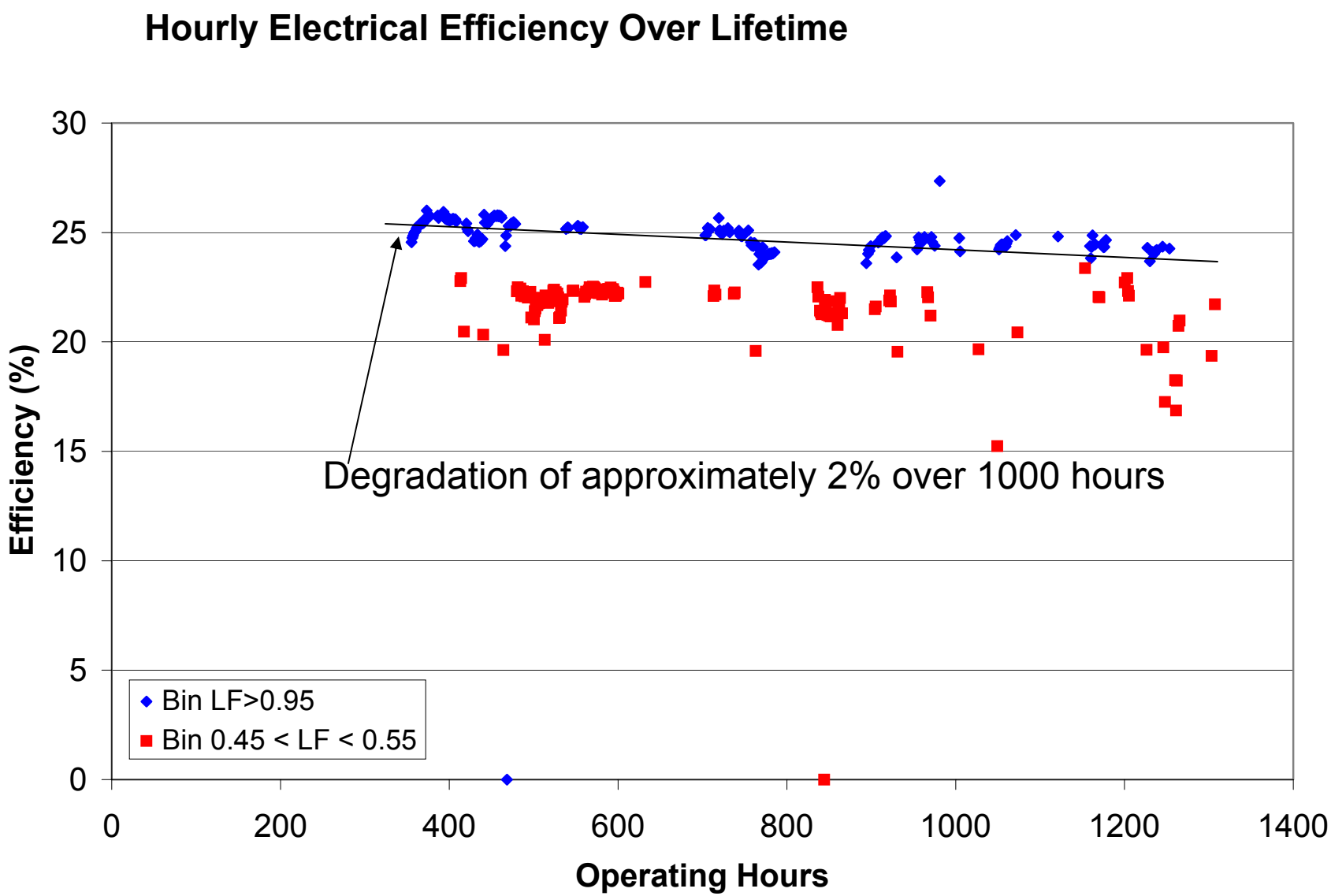

Ambient Condition Tests

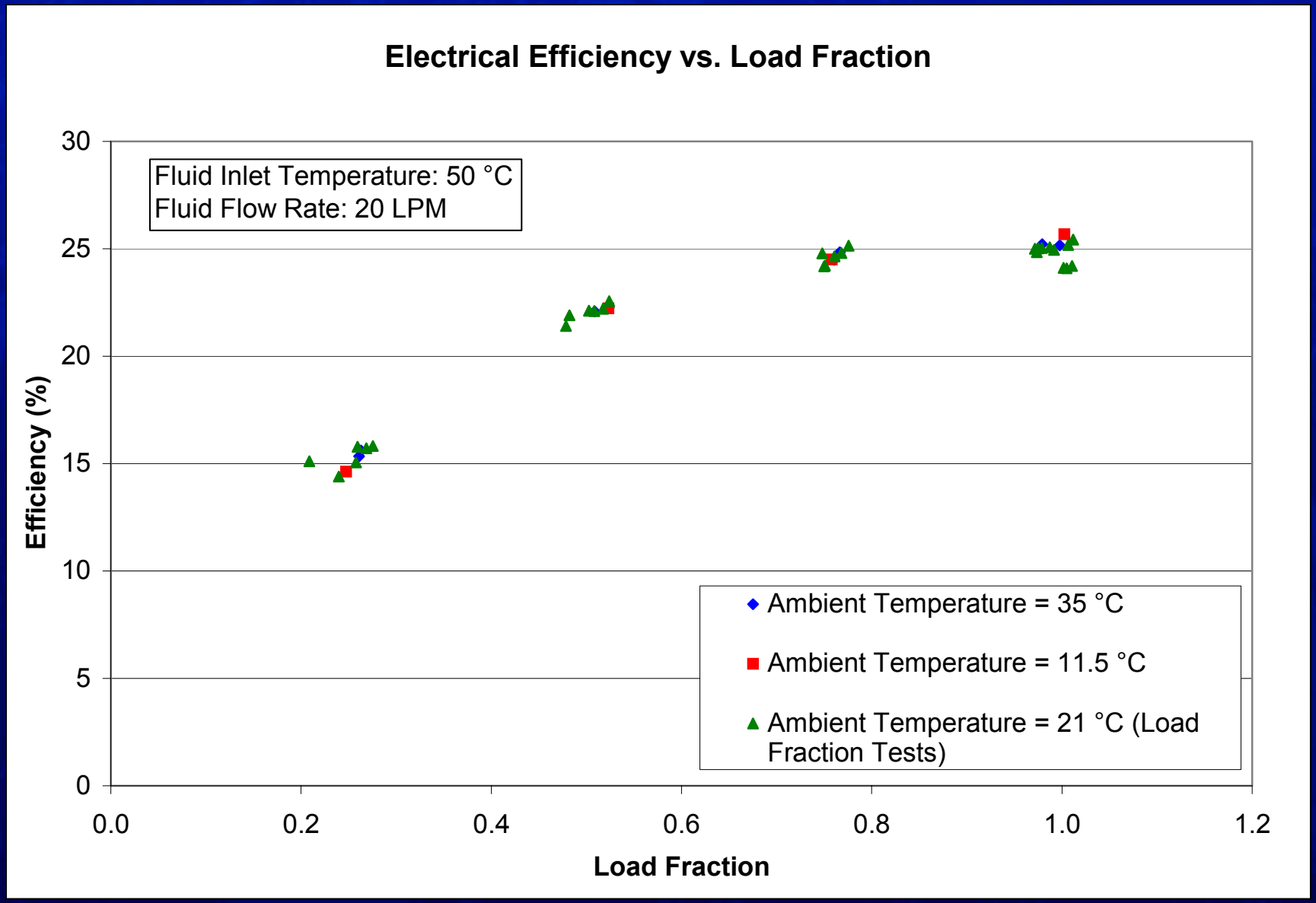

Ambient Condition Tests

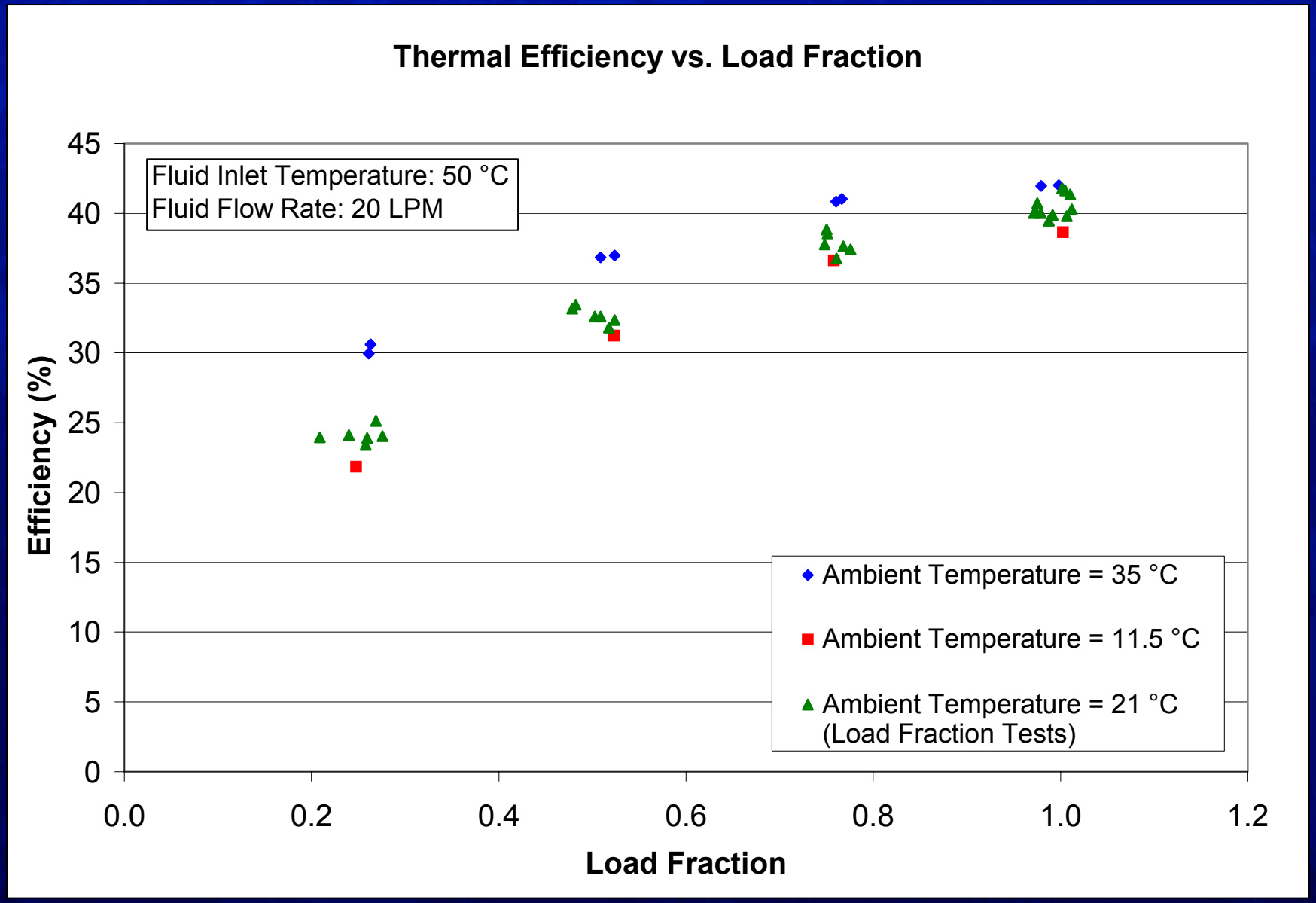

Ambient Condition Tests

Ambient Temperature °C	Relative Humidity %	Electrical Load Fraction %	Electrical Efficiency %	Electrical Relative Index	Thermal Efficiency %	Thermal Relative Index
35	55	**100**	25.2		42.0	
11.5	55	**100**	25.7	**1.02**	38.6	**0.92**
35	55	**100**	25.2		42.0	
35	55	**75**	24.8		41.0	
11.5	55	**75**	24.5	0.99	36.6	**0.89**
35	55	**75**	24.5		40.9	
35	55	**50**	22.3		37.0	
11.5	55	**50**	22.2	1.00	31.2	**0.85**
35	55	**50**	22.1		36.8	
35	55	**25**	15.3		30.0	
11.5	55	**25**	14.6	**0.95**	21.9	**0.72**
35	55	**25**	15.6		30.6	
35	**75**	50	21.7		36.5	
35	**20**	50	22.0	1.01	35.7	0.97
35	**75**	50	21.7		37.2	

- Ambient temperature strongly affects the thermal efficiency of the system, but not its electrical efficiency
- Relative humidity has no effect on either the electrical or thermal efficiency

Cogeneration Fluid Temperature Tests

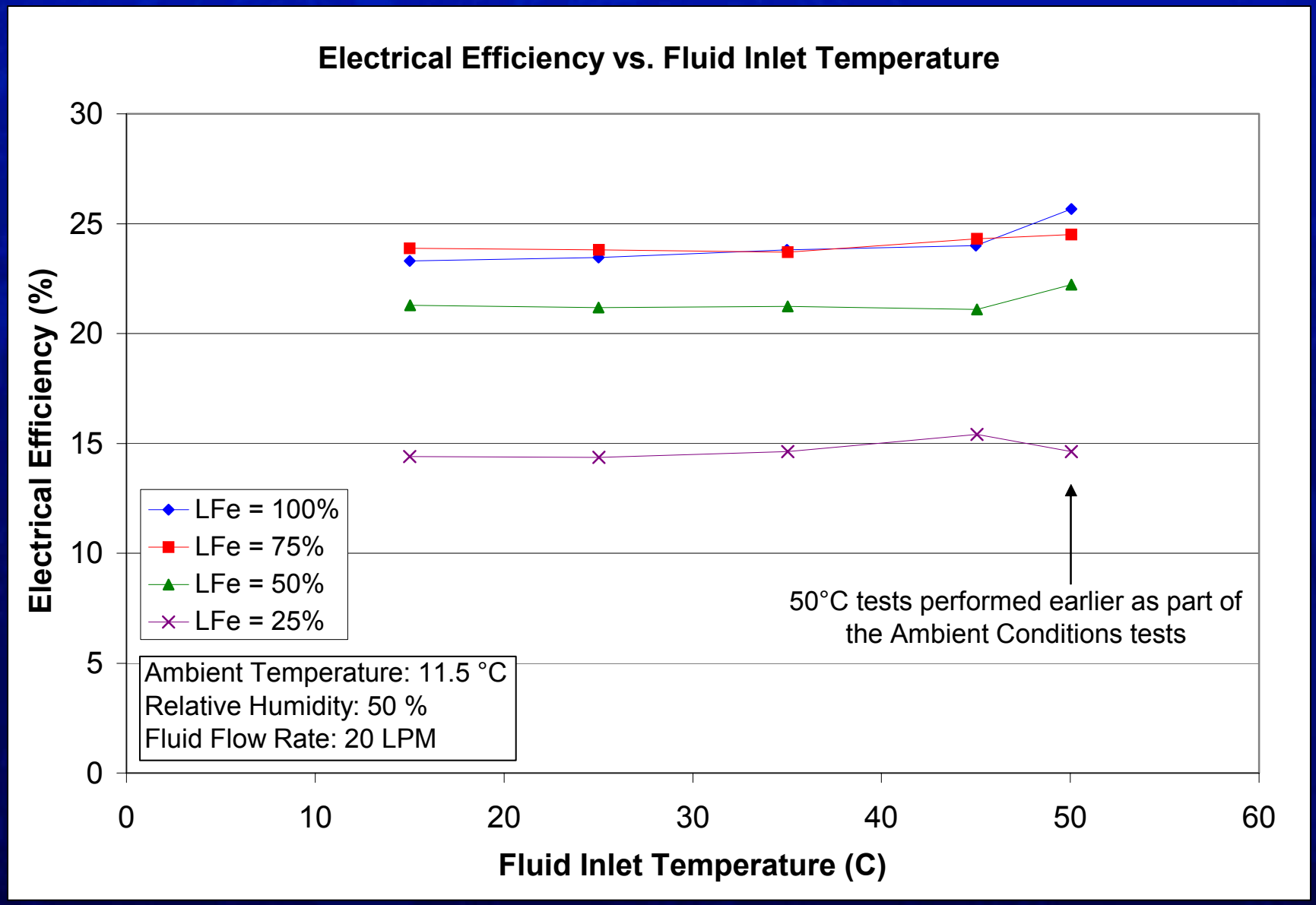

Cogeneration Fluid Temperature Tests

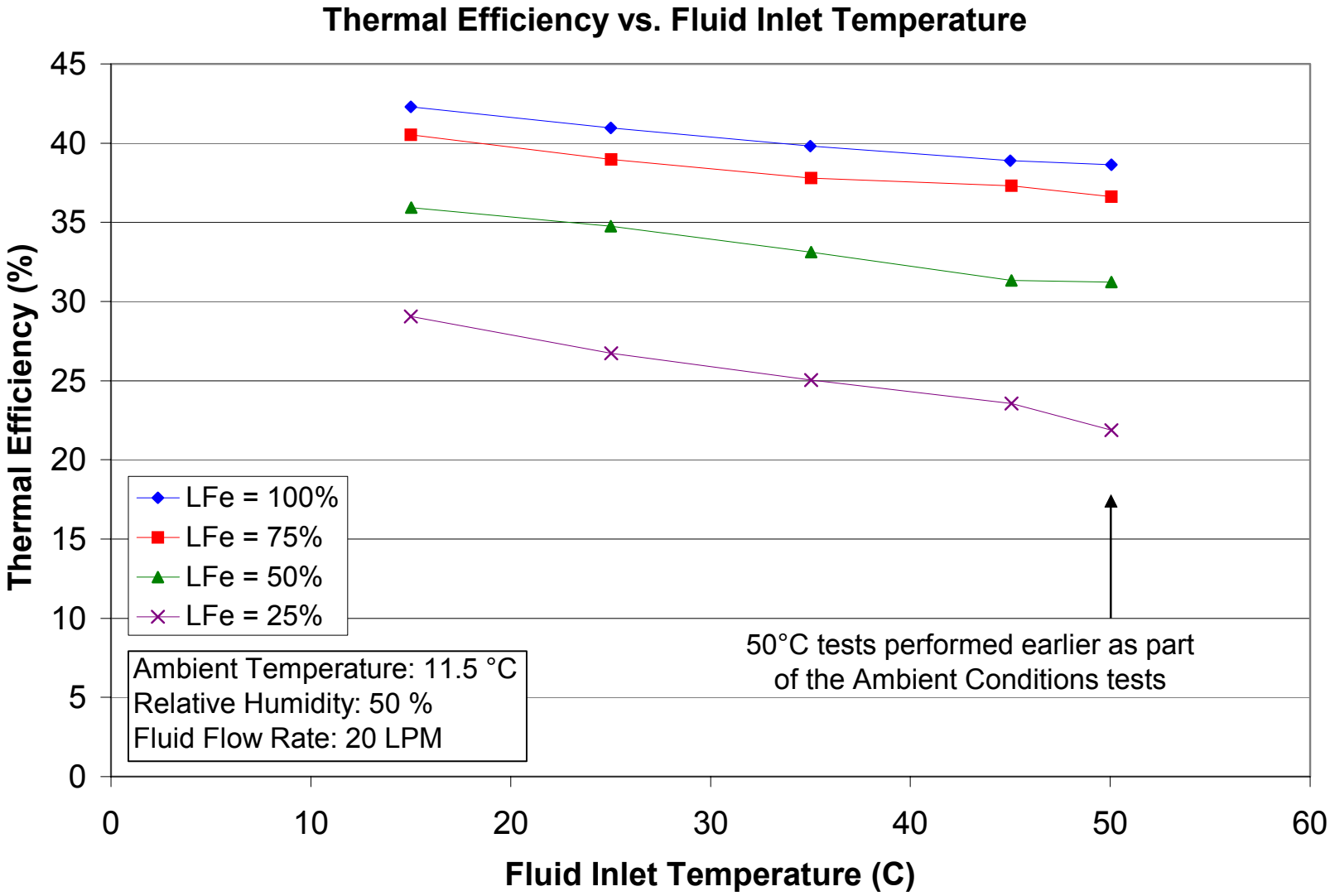

Space Heating Load Test

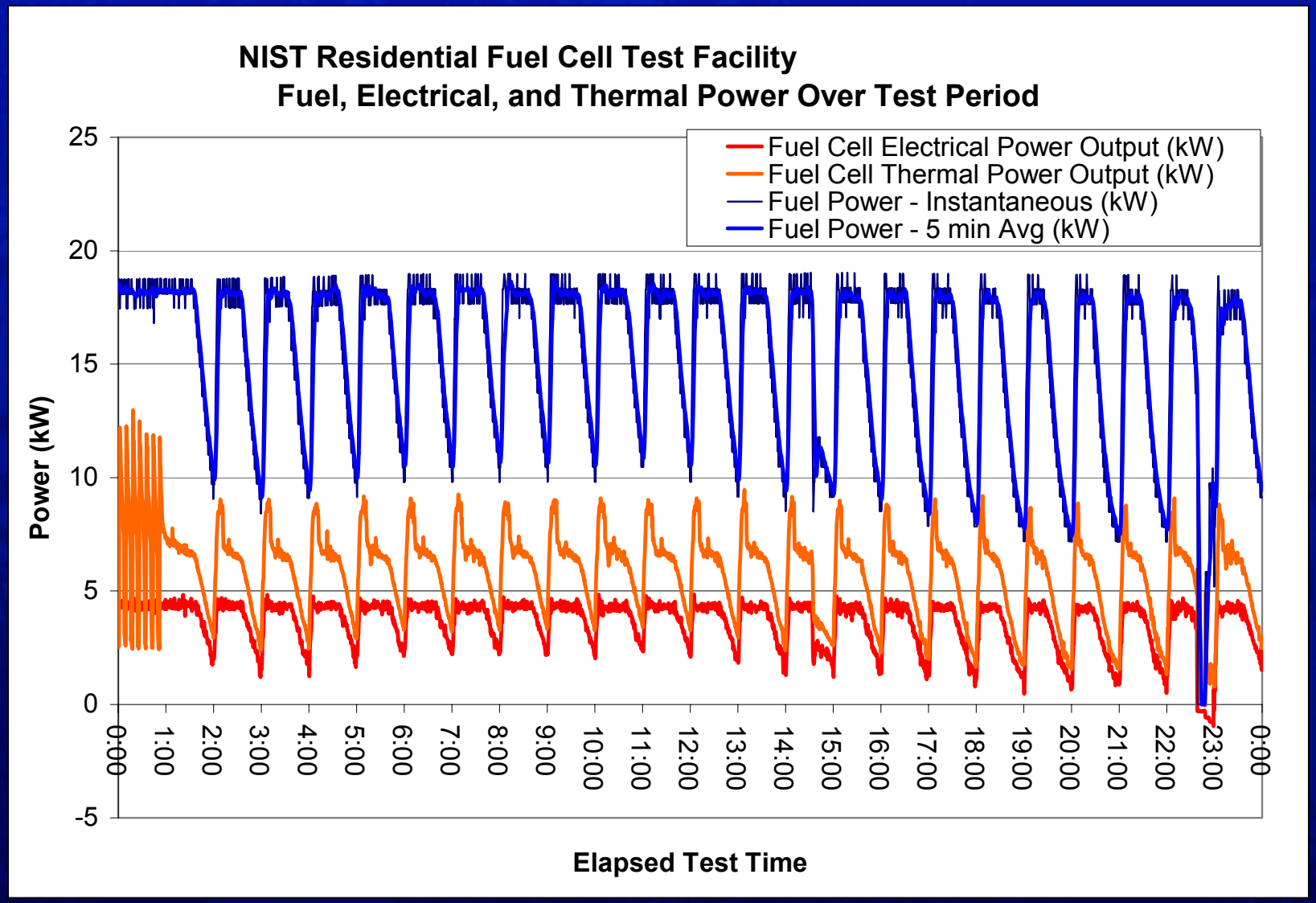

Space Heating Load Test

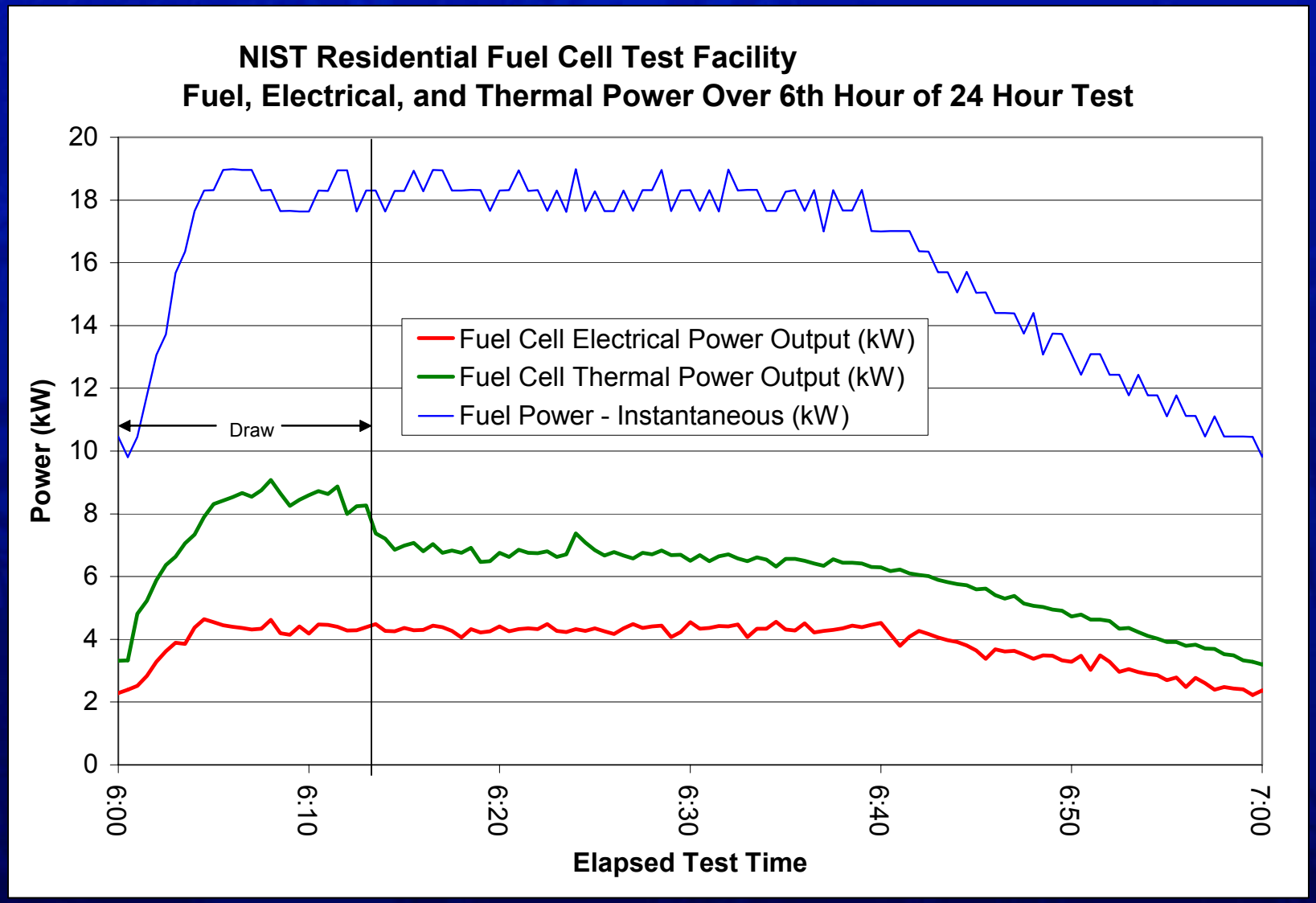

Space Heating Load Test

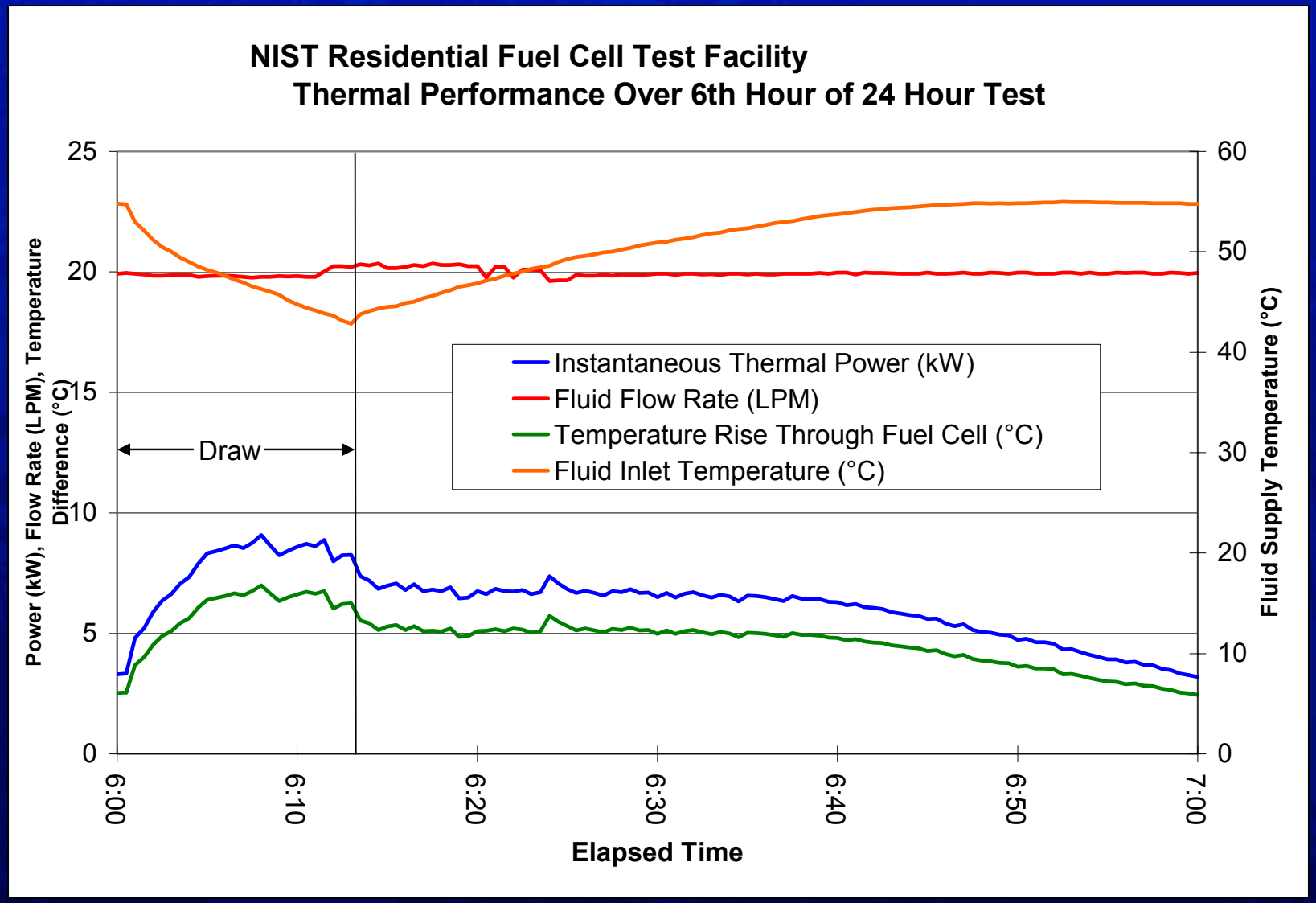

Domestic Hot Water Load Test

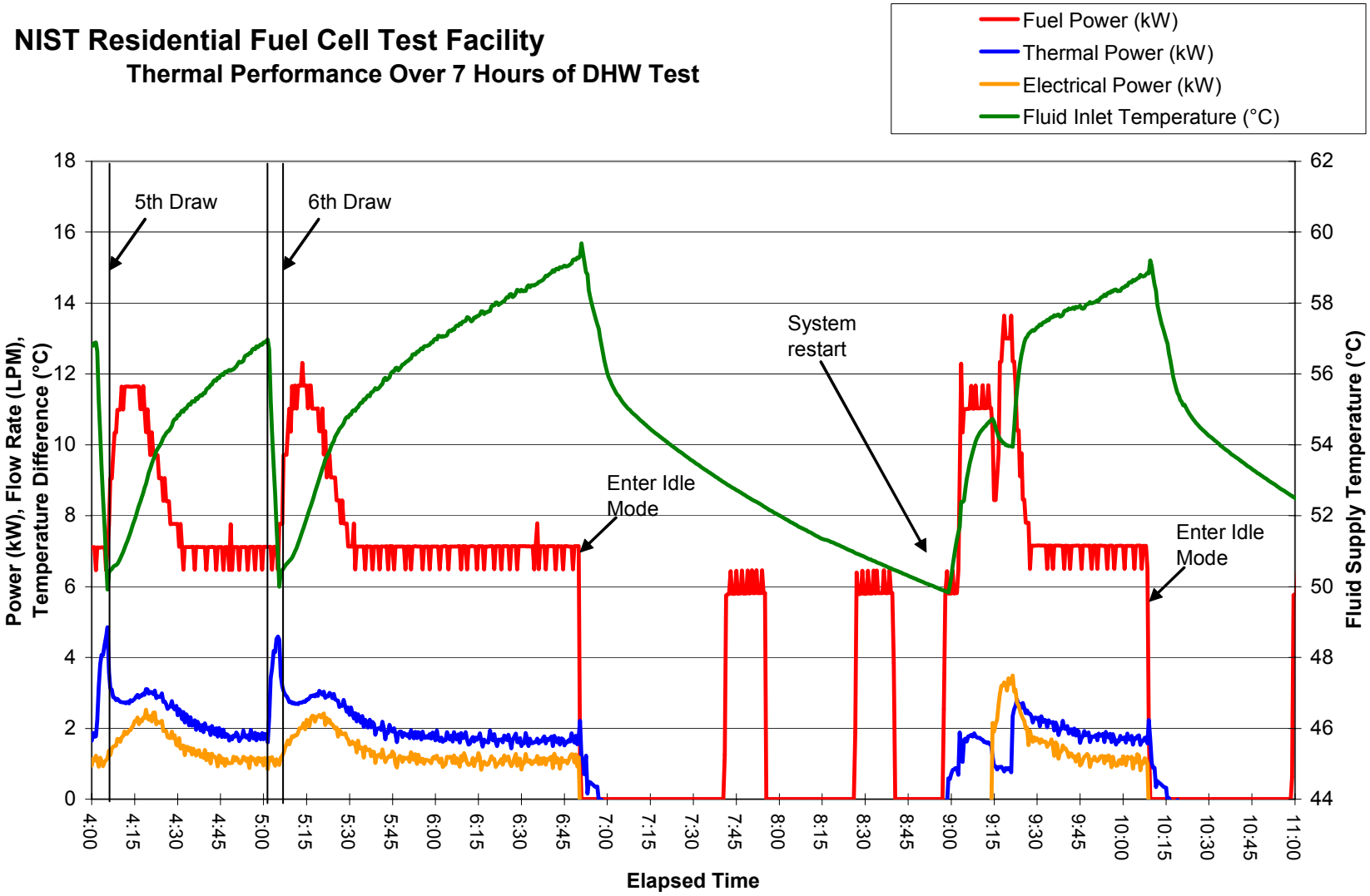

Simulated Use Test Summary

Efficiency	Domestic Hot Water Load	Space Heating Load
Electrical	10.8 %	23.6 %
Thermal	21.2 %	37.8 %
Overall	32.0 %	61.4 %

- Electrical and thermal efficiency over 24 hour period strongly depends upon size of thermal load
- Efficiency over space heating load test is similar to steady state testing due to larger thermal load
- Hot water test results in system entering idle mode, which consumes extra fuel due to startup and system heating

Conclusions

- Electrical output linked to thermal output, which is a function of cogeneration fluid temperature
- Thermal performance affected by:
  - Ambient temperature
  - Fluid temperature
- Electrical efficiency degrading at a rate of approximately 2% over 1000 hours
- Simulated use testing shows importance of correctly sizing system to thermal load, which demonstrates need for rating methodology
- Test results used to evaluate proposed rating methodology and create empirical model