Proceedings of the International Society for Optical Engineering: Photonics East, 1999

Diode Laser Measurements of HF Concentrations From Heptane/Air Pan Fires Extinguished by FE-36 And FE-36 Plus Ammonium Polyphosphate

R.R. SKAGGS, R.G. DANIEL, A.W. MIZIOLEK, AND K.L. McNESBY
U.S. Army Research Laboratory, Aberdeen Proving Ground, MD 21005
C. HERUD, W. R. BOLT, AND D. HORTON
U.S. Army Aberdeen Test Center, Aberdeen Proving Ground, MD 21005

Abstract

Tunable diode laser absorption spectroscopy is used to measure the time evolution of hydrogen fluoride concentrations produced from a series of enclosed heptane/air pan fires extinguished by FE-36 or FE-36 plus ammonium polyphosphate (APP). Recent advances in room temperature fiber coupled, near-infrared diode lasers provide isolation of the laser and signal processing electronics from the hostile sampling site. For the fires studied, the change in HF gas concentration with time is dependent upon the fire fighting chemical used to extinguish the fire. The presence of APP is observed to accelerate the dissipation of HF from the fire enclosure. Visible attenuation spectroscopy is also used to measure the amount of light attenuation (obscuration) that occurs as a hand held fire extinguisher containing powder fire fighting agent is released in the crew space of a M1-Abrams land combat vehicle. Obscuration tests demonstrate that release of APP from extinguishers in an occupied space does not present a visibility challenge to the vehicle personnel.

Keywords: Diode laser, fire, FE-36, HF

1. Introduction

The mandatory phasing out of halons 1301 (CF_3Br) and 1211 (CF_2ClBr) for use as the primary fire extinguishing agent aboard U.S. Army combat vehicles has led to the development of candidate replacement agents such as FE-36 ($C_3F_6H_2$) and FM-200 (C_3F_7H). These fluorinated propanes, though effective at extinguishing fires, are deficient in terms of increased weight and volume requirements needed for fighting the most difficult military fires. The increased amounts of replacement agent required for extinguishment, relative to halons 1301 and 1211, pose a concern with the levels of hydrogen fluoride [HF] formed as the primary decomposition product[1]. This concern has limited the acceptance of these agents for deployment in occupied spaces.

The two mechanisms by which HF concentrations can be decreased during and following fire extinguishment by FE-36 or FM-200 are by 1) reducing the time required to extinguish the fire, thereby minimizing the time that the fluorine containing suppressant is exposed to flame temperatures, or 2) releasing a scavenging agent in conjunction with the fire suppressant chemical to remove HF after it is produced. A potential chemical scavenging agent of gaseous HF is ammonium polyphosphate (APP), which is a commercially available chemical (Phos-chek™) with fire retardant properties. For the tests conducted here, the APP is suspended in an extinguisher as a gel and released from a nitrogen pressurized extinguisher as a white powder. One of the drawbacks to the release of a powder agent in an occupied space is the possibility of reduced visibility.

Presented here is a field study of the use of hand held fire extinguishers containing a fluorinated propane, FE-36, and APP to extinguish liquid heptane/air pan fires. This study has focused primarily on near infrared tunable diode laser absorption spectroscopy (NIR-TDLAS) measurements of HF concentrations produced from a series of enclosed heptane/air pan fires extinguished by FE-36 or FE-36 plus APP. A recent article from this laboratory details the use of NIR-TDLAS as the most effective diagnostic for gas phase HF measurements[2]. A series of extinguishment tests were conducted with FE-36 and FE-36 plus APP. By measuring the time evolution of the HF concentrations in fires extinguished with FE-36 plus APP compared to fires extinguished by FE-36 alone, the effectiveness of APP as a HF scavenging agent will be demonstrated and evaluated. Separate measurements of light

attenuation caused by the release of a FE-36 plus APP extinguisher inside an M1-Abrams land combat vehicle will also be described and compared against an extinguisher containing $NaHCO_3$ pressurized with N_2.

2. Experimental

Figure 1 shows a schematic diagram of the test facility containing the NIR-TDL experimental apparatus and signal processing electronics. TDLAS has proven to be a valuable, non-intrusive optical diagnostic for species concentrations and temperatures in combustion systems even when the local soot level is high[3,4,5,6,7,8,9]. The test facility is a 1.5 m^3 cubic enclosure, which contains a liquid heptane pan fire (fire size approximately 30 KW). HF measurements were made using as the fire suppressant FE-36 or one of the following combinations of FE-36 plus APP: FE-36 plus 7 % APP in a hand held extinguisher pressurized to 150 psi by N_2; FE-36 plus 7 % APP in a hand held extinguisher pressurized to 200 psi by N_2; FE-36 plus 10 % APP in a hand held extinguisher pressurized to 250 psi by N_2; and FE-36 plus 15 % APP in a hand held extinguisher pressurized to 300 psi by N_2.

The test protocol was as follows: A 250 ml pan filled with heptane fuel was placed underneath 0.5 m high steel table within the cubic container. The NIR-TDLAS HF gas measurement apparatus was situated on top of the metal table where a calibration cell was placed in the line-of-sight path between the GRIN lens from which the 1.3 micrometer laser radiation was emitted and the InGaAs detector. The calibration cell was used to provide a HF spectrum to tune the laser and data collection system. The calibration cell was removed prior to fire testing. A hand held bottle-type extinguisher charged with 770 g FE-36 plus scavenging agent (when applicable) and pressurized with N_2 gas was situated on top of the cubic container. The extinguisher bottle output nozzle was attached via tubing to a spray nozzle protruding into the cubic container.

The heptane pan fire was ignited using a butane electric match and the TDLAS HF gas measurement was initiated immediately after an internal cubic container fan was turned on and the container door was closed. The heptane/air fire was allowed to burn for 15 seconds at which time the hand held extinguisher's contents were discharged into the interior of cubic container producing total flooding inhibitor conditions (10 % by volume FE-36 concentration). A video camera mounted within the cubic container recorded the fire event during the tests. HF data collection occurred for 180 s after ignition of the fuel, at a rate of 1 spectrum per second.

Following each test, the interior of the cubic container was rinsed with an aqueous solution of sodium bicarbonate to neutralize any acid residues on the interior surface and the container was allowed to air dry. The experimental details and analysis of NIR-TDLAS HF spectra have been described previously[2] and will only be summarized here.

A sawtooth modulation (≈100 Hz) supplied from a Function Generator (Tektronix Model FG 504) was used to rapidly scan over the desired spectral frequency range. Coincident with the 100 Hz modulation was a small amplitude but higher frequency modulation, ≈ 20 KHz, taken from the sine output of a SRS Model 830 DSP Lock-in Amplifier. The application of the two modulations to the laser diode current facilitated wavelength modulation spectroscopy (2f detection) which was needed for enhanced signal sensitivity[10,11,12,13,14]. 2f spectroscopy is convenient for analysis because of the linear relationship that exists between the measured absorption signal and the analyte's concentration. Concentrations of HF were calibrated using a continuous flow cell containing various known mixtures of HF in N_2 and measuring each mixture's unique absorption spectrum.

The emitted infrared light from the diode was launched into a fiber coupled to the laser housing. Fiber optic patch cables were used to deliver infrared light into the test facility. The fiber is terminated by a gradient index (GRIN) lens (Sentech Systems, Inc.), which collimates the laser radiation. The GRIN lens-tipped fiber is placed into a "pitch and catch" arrangement which directs the infrared radiation over a 14 cm open path to a InGaAs detector (Epitaxx Model ETX 1000 T). The signal observed at the detector was directed to a phase sensitive, lock-in amplifier (Stanford Research Systems Model 830) which acquired the 2f absorption signal. The 2f output signal from the SRS lock-in amplifier was then sent to a digital oscilloscope (LeCroy Model 9654). Resulting spectra were acquired every second for a three minute time period and then sent to a Gateway 2000™ laptop computer for storage

and analysis. For experiments described here, the P(2) transition of the first vibrational overtone of HF was monitored at 7665 cm^{-1} [5].

Figure 2 presents a schematic representation of the experimental apparatus used for attenuation testing. The apparatus consists of a HeNe laser (Oriel Model 6611 output 632 nm), an Optical Chopper (Stanford Research Systems Model SR540), and a fiber optic fiber coupler (Newport Optics Model F-916T). The experimental equipment was mounted to a 46 x 46 cm optical bread board which was placed outside the crew compartment on top of the vehicle. A separate 41 cm optical rail supported the fiber collimating/ projection optics and a 15 mm^2 (active element) photodetector (Centro Vision Inc. OSD5-5T, 350-1100 nm). The optical rail was placed inside the vehicle in the driver's seat. Not shown is a plastic enclosure that was placed over the fiber collimating/projection optics to minimize the optic devices from exposure to the powder agent. A 18 m BNC cable and extension cord provided remote signal communications and power to the chopper and laser while another 18 m BNC cable transported the detector signal out to the detection electronics. The tests consisted of an occupant releasing a Kidde™ 2.75lb hand held fire extinguisher containing either FE-36 plus APP or $NaHCO_3$ plus N_2 at the personnel heater while inside the vehicle and all outside hatches were closed. With the hatch doors closed, the vehicle's nuclear and biological containment (NBC) system was operated to create a positive pressure inside the crew compartment.

Light attenuation is determined by monitoring the percent transmission of HeNe laser radiation that is incident on the detector as chemical agent is dispersed over the measurement region. Thus, if 100 % transmission occurs, all the light that exits the laser source is incident upon the detector and no attenuation occurred. The laser radiation is passed through an optical chopper, which modulates the laser radiation at $\approx$ 1000 Hz. After passing through the chopper, the laser radiation is launched into a 8m long visible fiber optic cable (3M multi-mode, 1000 mm diameter core, glass substrate optical fiber). Light passes out the opposite end of the fiber where it is terminated into a 11 mm SMA fiber ferrule (Oriel Model 77670). The terminated fiber is inserted into a glass collimating beam probe (Oriel Model 77645). The collimated light exits the beam probe and is directed into a visible Nikon™ objective lens, which apertures the beam to approximately 5-6 mm and directs it over a 0.4 m free space where the laser radiation is incident onto the 15 mm^2 photodetector. The free space through which the laser radiation passes is the region in which the powdered agent, if present, will attenuate the laser radiation. The light intensity reaching the detector is converted to a voltage, which is then measured using a lock-in amplifier referenced to the chopper frequency. A DC voltage (0-5 V full scale), proportional to the detector signal, is output to the digital oscilloscope (LeCroy Model 9654), which is also triggered by the optical chopper, and is processed and recorded using a Micron Trek™ 233 MHz lap top computer at a rate of 2 Hz.

3. Results

Figure 3 presents average HF concentration profiles from extinguishment tests with FE-36 only, FE-36 plus 7 % APP, and FE-36 plus 15 % APP. For the FE-36 plus 7 % APP and FE-36 plus 15 % APP tests, three individual profiles for each extinguisher concentration were used to construct each test's average profile. For the FE-36 only test data from five different profiles, collected over the entire testing period, compose the average profile. Statistically the 1σ variances for the profiles were 41, 42, and 31 percent for FE-36 only, FE-36 plus 7% APP, and FE-36 plus 15 % APP. The results indicate that for the fire extinguished with FE-36 only, the average peak HF level was 1394 ppm. For fires extinguished using FE-36 plus 7 % APP the peak HF concentration was 996 ppm. For fires extinguished using 15 % APP the peak HF concentration was approximately 73 ppm. The variances in the peak values were 45, 36, and 18 percent respectively.

Measurement of HF gas concentration versus time provides a monitor of the fire history, and of the effectiveness of any HF scavenging agent used. That is, the time from fire suppressant release until the maximum HF concentration occurs is a measure of the time required for fire extinguishment (also verified visually using a video recorder), while the rate at which the HF concentration decreases following extinguishment provides a measure of effectiveness of scavenging agent (when used), or a measure of the rate at which HF gas reacts with the walls of the enclosure. Reduction in fire out times reduces HF levels by reducing the time the agent is exposed to flame temperatures. **Figure 3** shows that for the fires extinguished by FE-36 only, FE-36 plus 7 % APP, and FE-36

plus 15 % APP, the average fire out times are 18, 20, and 12 seconds respectively. Statistically the difference in fire out times between fires extinguished by FE-36 and FE-36 plus 7 % APP are insignificant with a 1σ error of 22 percent. For fires extinguished by FE-36 plus 15 % APP, the fire out times were reduced by approximately 35%. The decrease in peak HF levels shown in **Figure 3** for fires extinguished using FE-36 only and fires extinguished using FE-36 plus 15% APP (approximately a factor of 10) is partially attributable to the fire suppression properties of APP (reflected by the shorter fire out time), as well as the HF scavenging capability of the powder.

Figure 4 presents the peak HF levels versus fire out times for all fires extinguished by FE-36 only and with all combinations FE-36 + APP. The FE-36 only data illustrates that as the fire out times increase there is a monotonic increase in the amount of HF present in the system. When the APP is added to the extinguisher, the amount of HF measured is always less than that measured in fires extinguished using only FE-36. In real fires reduction of fire out times are difficult to control, and if the time duration is extended some measures must be taken to control the HF levels. In order to select the proper concentrations of APP and operating conditions, the time rate of change of HF concentration must be measured. The rate of change in HF concentrations can be compared between extinguishers using data from **Figure 3** starting at the maximum HF concentration time (t_o) and plotting the natural logarithm of the HF concentration versus the natural logarithm of the elapsed time from the HF maximum, as seen in **Figure 5**. Note: Because the HF concentrations for tests with FE-36 plus 15 % APP were well below the toxic exposure critical concentration of 500 ppm, no further analysis of the data was warranted as well as the fact that the discharged APP concentration probably exceeded acceptable respiratory exposure levels [15]. With **Figure 5** on a ln-ln scale indicates that the dissipation of HF versus time is a second order decay process. Linear regression analysis of the data in **Figure 5** indicate that the FE-36 only data have a slope of -0.645 ppm/sec ($R^2 = 0.991$) while the FE-36 plus 7 % APP have a slope of -0.746 ppm/sec ($R^2 = 0.980$). The difference in slopes for the two tests is approximately 15 % greater for the fires extinguished by FE-36 plus 7 % APP, and thus faster decreases in HF concentrations should be expected for fires extinguished by this hybrid extinguisher.

Regardless of how fast HF is reduced in a given system, from a more practical standpoint the amount of HF in the system over a period of time, i.e. time weighted average, must be determined to address toxicity concerns. Again using data from **Figure 3** the time weighted average doses of HF, calculated from the extinguisher release at t=15 sec until t=180 sec, were 712, 492, and 51 ppm for fires extinguished by FE-36 only, FE-36 plus 7% APP, and FE-36 plus 15 % APP respectively. These values imply that for the tests with FE-36 only, the HF dose is toxic, while the tests with FE-36 plus 7% APP and 15 % APP achieve minimum to very acceptable HF reductions respectively.

Finally **Figure 6** presents the percent transmission profiles measured during and following the release of the FE-36 plus APP and the $NaHCO_3$ plus N_2 extinguishers inside the M1-Abrams combat vehicle. The profiles indicate that the maximum light attenuations were 0 percent transmission for the $NaHCO_3$ plus N_2 extinguisher and 18.04 percent transmission for the FE-36 plus APP extinguisher. Empirical correlations using a VHS video taken inside the vehicle during the extinguishers release indicate that clear visibility to the human eye correlates to an attenuation level of approximately 70 %. Thus, for all percent transmission levels recorded below 70 % corresponds to an obscured field of view at a distance of 30.48 cm. The time duration that visibility is less than 70 percent transmission for the $NaHCO_3$ extinguisher is 63 seconds and 49 seconds for the FE-36 plus APP extinguisher. The more rapid return to visibility, i.e. ≥ 70 % transmission, using the FE-36 plus APP extinguisher is attributed to the fact that the powder is not released in a dry state, rather it is "wet" and thus falls faster to the vehicle floor.

4. Conclusions

NIR-TDLAS has been demonstrated to measure HF in a practical field application. The results presented here indicate that HF concentrations produced from fires extinguished by FE-36 plus APP are being reduced in the cubic test container and that the presence of APP accelerates this reduction. Thus the combination of APP in an extinguisher containing FE-36 appears to reduce HF levels. Visibility reduction during extinguisher deployment was measured inside an actual combat vehicle and determined to be minimal. The HF results should be met with caution since HF and APP threshold exposure limits inside vehicles have not yet been established. From an experimental standpoint, more tests should probably be conducted to improve statistical deviations as well as post testing analysis

of the reacted APP to understand how APP reacts with HF. Future tests will attempt to meet these concerns in order to develop a chemical kinetic mechanism for post fire HF activity.

5. Acknowledgments

For the light attenuation experiments, the authors would like to thank Dave Roberts (International Imaging Systems of ATC) for VHS filming, Jeff Morris (ARL) for loan of the SRS optical chopper, and Edwin Lancaster (ARL) for fabrication of the fiber optic cable. The HF testing was financially supported by the U.S. Army TACOM (Steve McCormick) and POWSUS Inc. (Harry Stewart and Don MacElwee). Finally R. Skaggs would like to acknowledge financial support from the Army Research Laboratory through an American Society for Engineering Education Postdoctoral Fellowship.

6. Figures

Figure 1: Schematic diagram of experimental HF measurement apparatus

Figure 2: Schematic diagrams of light attenuation measurement apparatus

Figure 3: Average HF concentration profiles versus measurement time. The diamond symbols (◆) are HF concentrations from fires extinguished by FE-36 only, the square symbols (■) are HF concentrations from fires extinguished by FE-36 plus 7 % APP, and the triangle symbols (▲) are HF concentrations from fires extinguished by FE-36 plus 15 % APP.

Figure 4: Peak HF concentrations versus fire out times for fires extinguished by FE-36 only (■) and FE-36 + APP (▲)

Figure 5: Rate plot of ln HF concentrations versus ln time for fires extinguished by FE-36 only ( ) and FE-36 + plus 7 % APP (Δ). The straight solid lines represent linear regression analysis of the data.

Figure 6: Percent transmission profiles collected from measurement of light attenuation while an extinguisher containing FE-36 plus APP (solid line) and FE-36 plus $NaHCO_3$ (dashed line) were released inside an M1 combat vehicle. The horizontal line drawn across the graph is the 70 % transmission level which corresponds to clear visibility by the human eye.

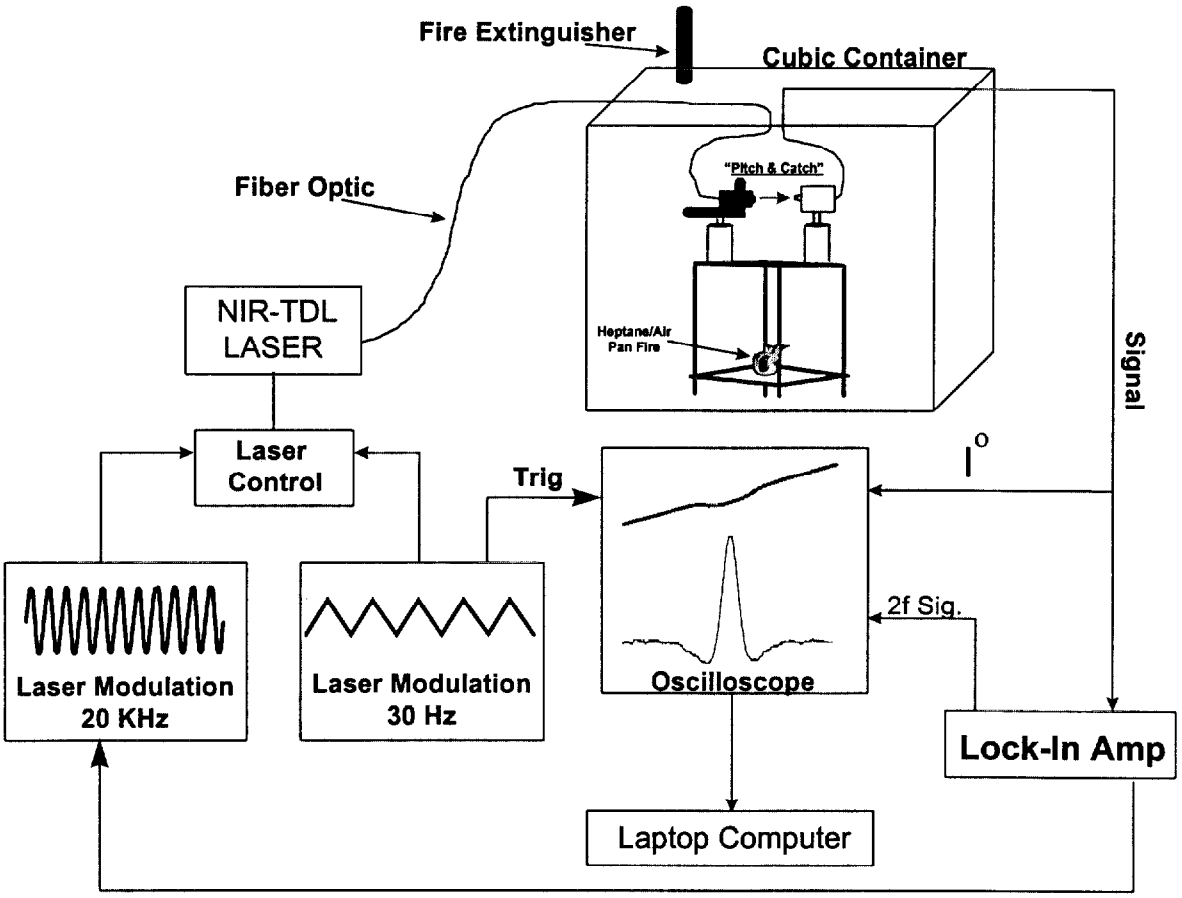
Fire Extinguisher
Cubic Container
"Pitch & Catch"
Fiber Optic
NIR-TDL LASER
Heptane/Air Pan Fire
Signal
Laser Control
Trig
I^o
2f Sig.
Laser Modulation 20 KHz
Laser Modulation 30 Hz
Oscilloscope
Lock-In Amp
Laptop Computer

Figure 1

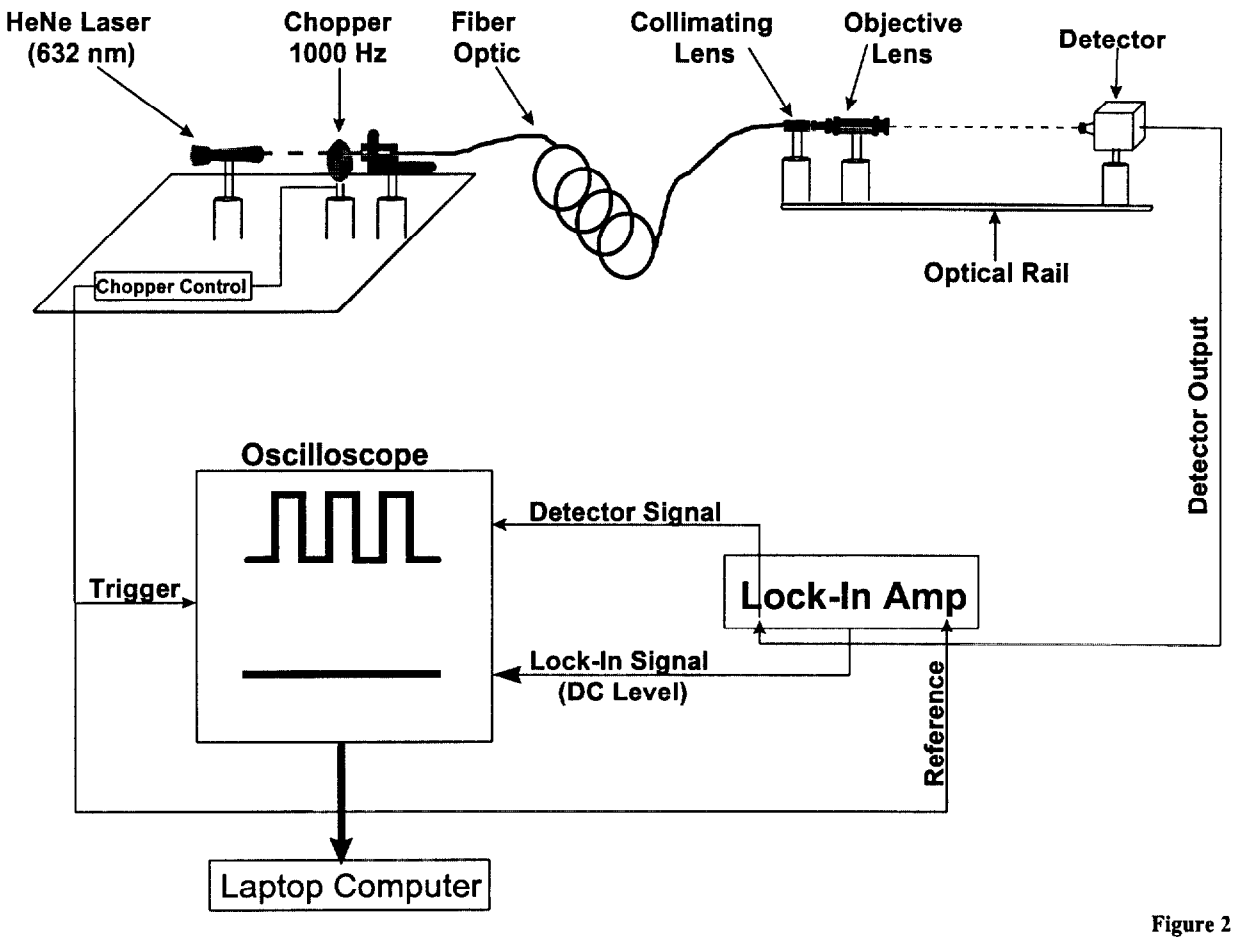
HeNe Laser
(632 nm)
Chopper
1000 Hz
Fiber
Optic
Collimating
Lens
Objective
Lens
Detector
Optical Rail
Chopper Control
Detector Output
Oscilloscope
Detector Signal
Trigger
Lock-In Amp
Lock-In Signal
(DC Level)
Reference
Laptop Computer

Figure 2

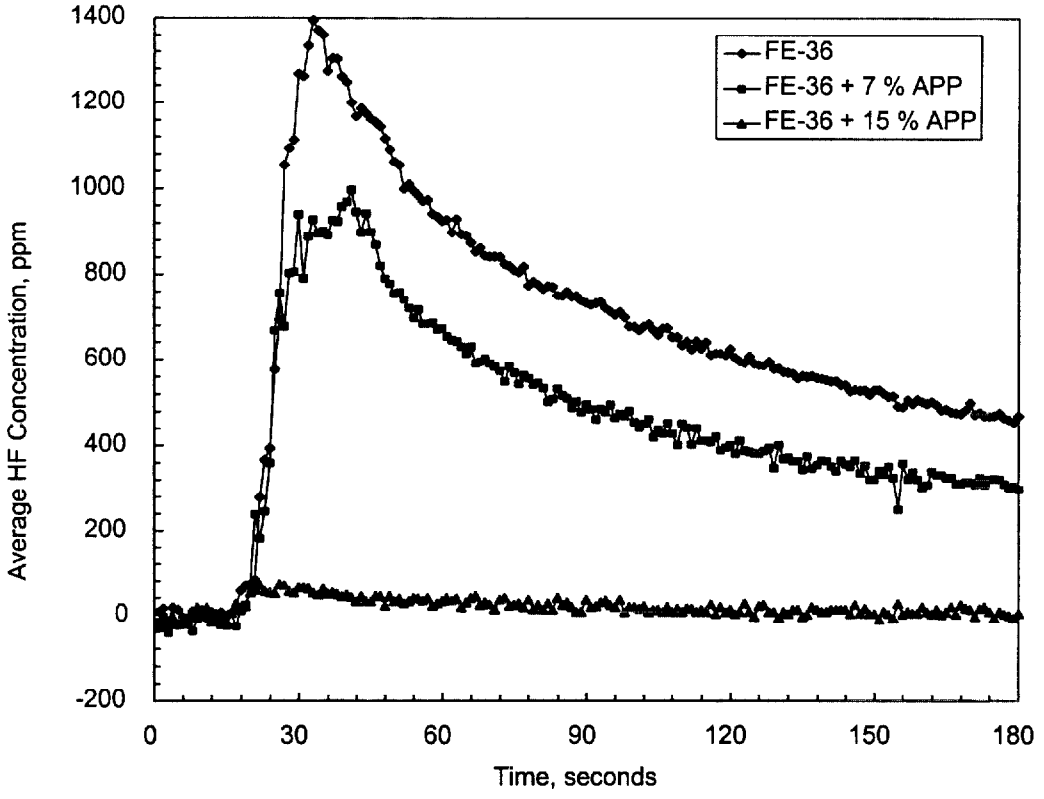
1400
1200
1000
800
600
400
200
0
-200
Average HF Concentration, ppm
0
30
60
90
120
150
180
Time, seconds
FE-36
FE-36 + 7 % APP
FE-36 + 15 % APP

Figure 3

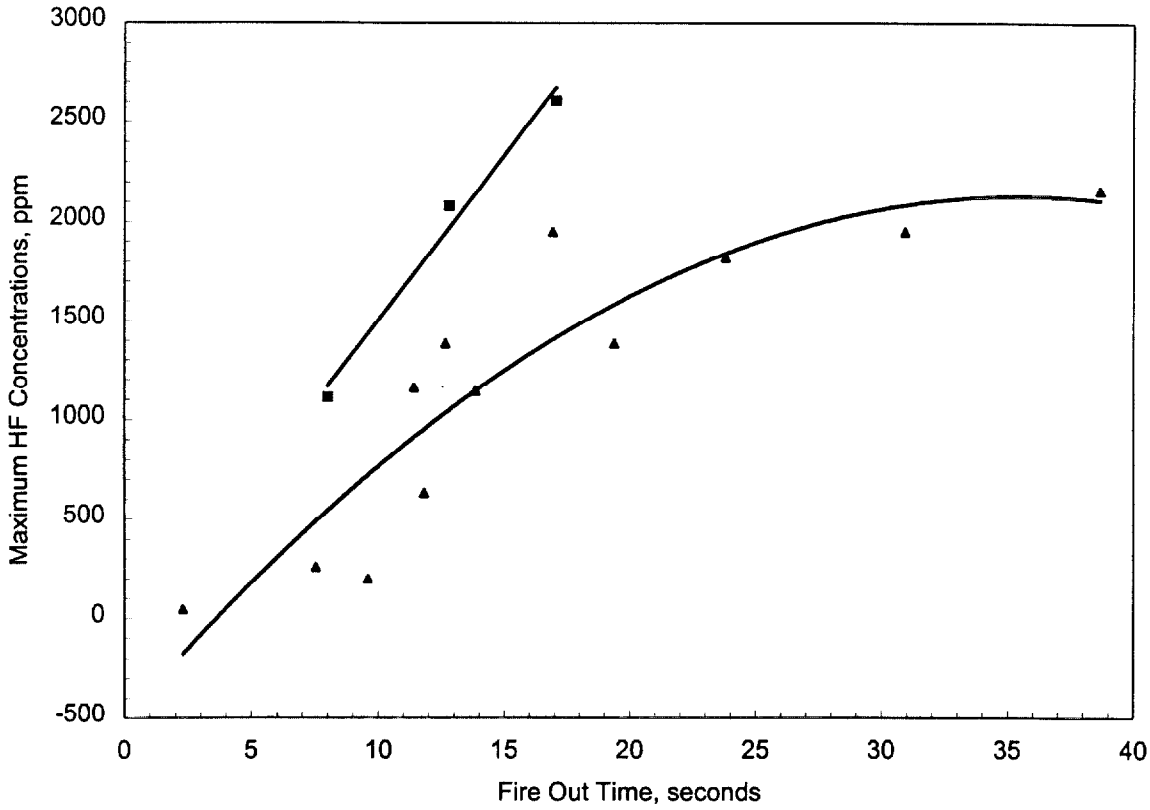
3000
2500
2000
1500
1000
500
0
-500
Maximum HF Concentrations, ppm
0
5
10
15
20
25
30
35
40
Fire Out Time, seconds

Figure 4

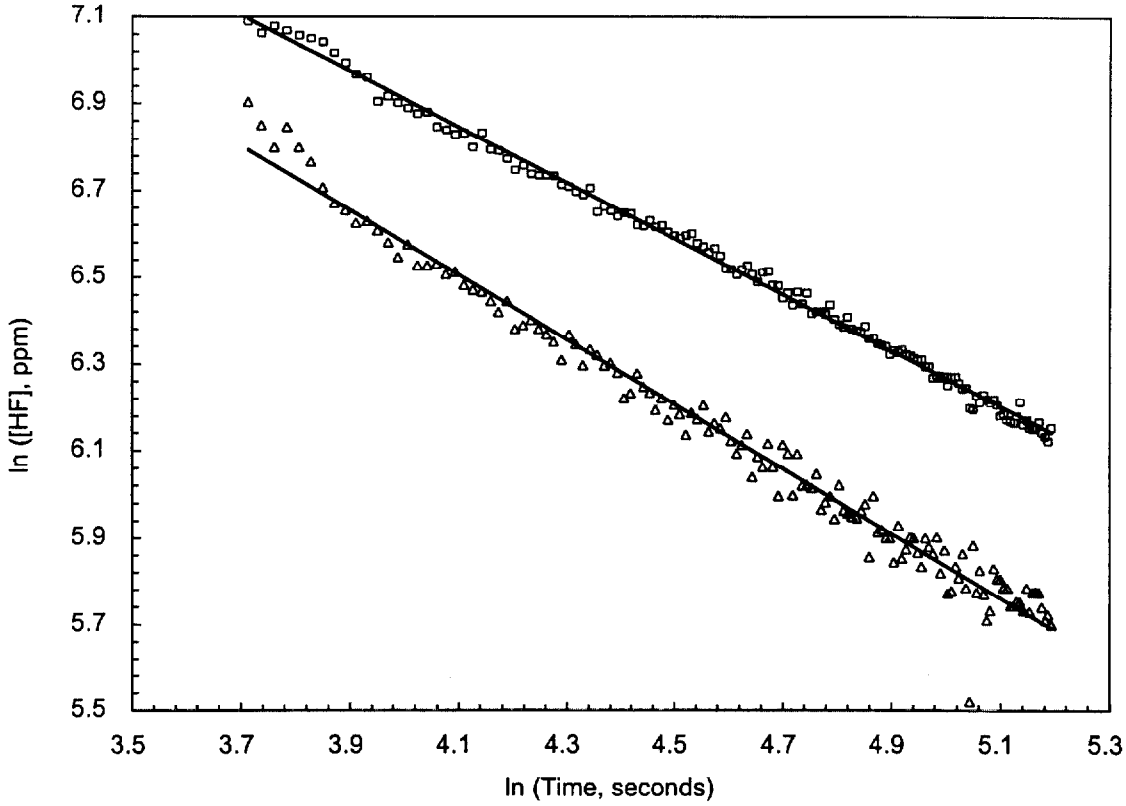
7.1
6.9
6.7
6.5
6.3
6.1
5.9
5.7
5.5
ln ([HF], ppm)
3.5
3.7
3.9
4.1
4.3
4.5
4.7
4.9
5.1
5.3
ln (Time, seconds)

Figure 5

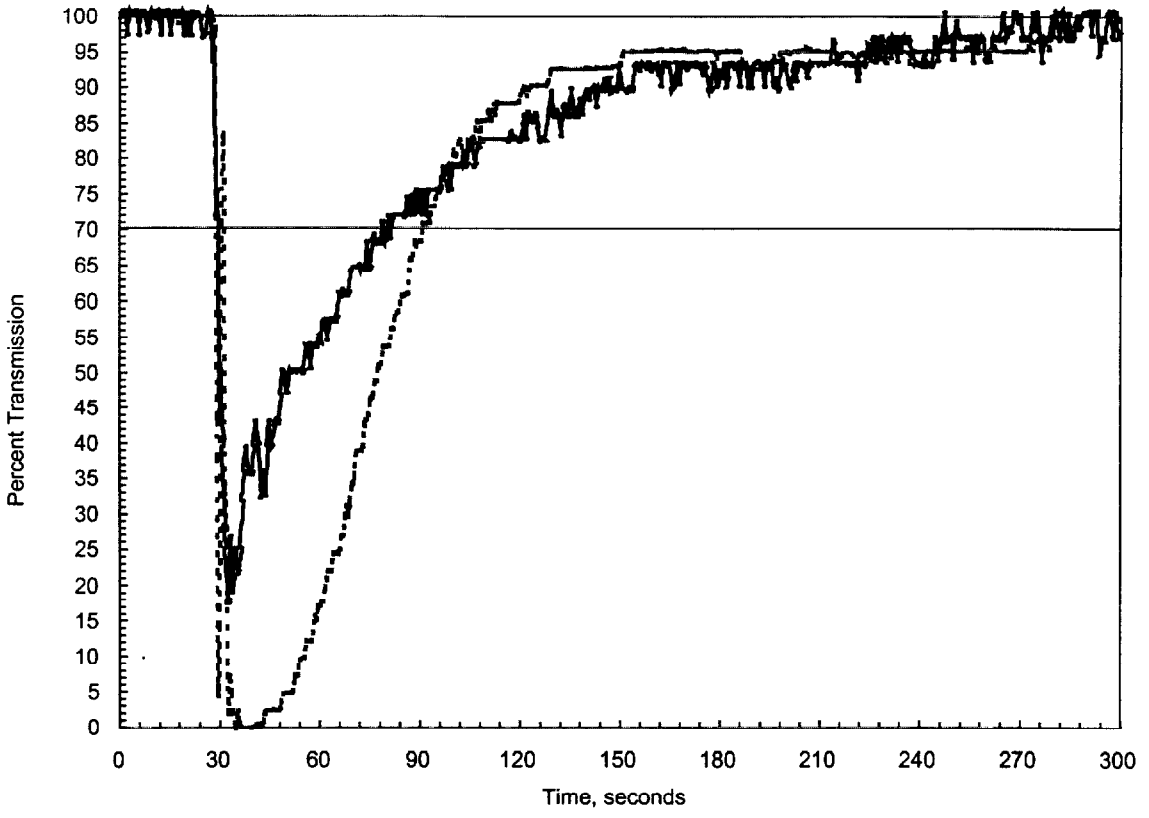
Percent Transmission
100
95
90
85
80
75
70
65
60
55
50
45
40
35
30
25
20
15
10
5
0
0
30
60
90
120
150
180
210
240
270
300
Time, seconds

Figure 6

7. References

1. K.L. McNesby, R.G. Daniel, J.M. Widder and A.W. Miziolek , "Spectroscopic investigation of atmospheric-pressure counterflow diffusion flames inhibited by halons," *Applied Spectroscopy* **50**, pp. 126-130, 1996.
2. K.L. McNesby, R.R. Skaggs, A.W. Miziolek, M. Clay, S. Hoke, and C.S. Miser, "Diode laser-based measurements of hydrogen fluoride gas during chemical suppression of fires," *Applied Phys. B*, in press, 1998.
3. R.K. Hanson, "High resolution spectroscopy of combustion gases using a tunable IR diode laser," *Appl. Opt.* **19**, pp. 482-484 1980.
4. P.L. Varghese and R.K. Hanson, "Tunable infrared diode laser measurments of line strengths and collision widths of $^{12}C^{16}O$ at room temperature," *J. Quant. Spect. and Rad. Trans.* **24**, pp. 479-489, 1980.
5. S.M. Schoenung and R.K. Hanson, "Laser absorption sampling probes for temporally and spatially resolved combustion measurments," *Combust. Sci. and Technol.* **24**, pp. 227-237, 1981.
6. J.H. Miller, S. Elreedy, B. Ahvazi, F. Woldu, and P. Hassanzadeh, "Tunable diode laser measurement of carbon monoxide concentrations and temperatures in a methane air laminar diffusion flame," *Appl. Opt.*, **32**, pp. 6082-6089, 1993.
7. Q.V. Nguyen, B.L. Edgar, R.W. Dibble, and A. Gulati, "Experimental and numerical comparison of extractive and in situ laser measurements of non-equilibrium carbon monoxide in lean-premixed natural gas combustion," *Combust. and Flame* **100**, pp.395-407, 1995.
8. R.R. Skaggs and J.H. Miller, "A study of carbon monoxide in a series of laminar ethylene/air diffusion flames using tunable diode laser absorption spectroscopy," *Combust. and Flame*, **100**, pp. 430-439, 1995.
9. R.R. Skaggs and J.H. Miller, "Tunable diode laser absorption measurements of carbon monoxide and temperature in a time-varying, methane/air, non-premixed flame," *Twenty-Sixth (Intl.) Symposium on Combustion*, pp. 1181-1188, 1996.
10. J. Reid and D. Labrie, "Second harmonic detection with tunable diode lasers-comparison of experiment and theory," *Appl. Phys. B* **26**, pp. 203-210, 1981.
11. D.T. Cassidy and J. Reid, "Atmospheric pressure monitoring of trace gases using tunable diode lasers," *Appl. Opt.* **21** pp. 1186-1190, 1982.
12. D.M. Bruce and D.T. Cassidy, "Detection of oxygen using short external cavity GaAs semiconductor diode lasers," *Appl. Opt.* **29**, pp. 1327-1332, 1990.
13. J.A. Silver, D.S. Bomse, and A.C. Stanton "Diode laser measurements of trace gas concentrations of ammonia in an entrained-flow coal reactor," *Appl. Opt.* **30**, p. 1505, 1991.
14. D.S. Bomse, A.C. Stanton, and J.A. Silver, "Frequency modulation and wavelength modulation spectroscopies: comparison of experimental methods using a lead salt diode laser," *Appl. Opt.* **31**, p.718 1992.
15. POWSUS, Inc, Private Communication, 1998.