On the Design of an Apparatus for Screening Liquid Fire Suppressants*†

Jiann C. Yang, Michelle K. Donnelly, Nikki Privé, and William L. Grosshandler
Building and Fire Research Laboratory
National Institute of Standards and Technology
Gaithersburg, MD 20899 U.S.A.

ABSTRACT

This paper discusses the design and use of an apparatus for evaluating the effectiveness of liquid fire suppression agents as possible replacements for halon 1301. The apparatus consists of a porous cylindrical burner located in the test section of a vertical wind tunnel and a droplet generation system. Liquid droplets are injected into the flow stream and entrained upward toward the burner for evaluation. The suppression effectiveness is ranked based on the conditions at the transition from one mode of flame (enveloped) to the other (wake) established at the burner for a given fluid application rate. The apparatus is currently being used to test a variety of fluids.

INTRODUCTION

The recent ban on the production of halon 1301 (CF_3Br), an ozone depleting substance, has resulted in extensive search for replacements and alternatives[1,2]. The applications of fire suppression efficiency screening methods constitute an important aspect of this search process because good screening methods can facilitate the identification, comparison, and selection of potential candidates for halon replacement. Most of the current methods for fire suppression efficiency screening (*e.g.*, cup burners) are designed for evaluating fire suppressing agents that can be delivered in the form of vapor. Potential uses of liquid agents as replacements have been recently proposed in several applications (*e.g.*, shipboard machinery spaces, engine compartments in armored vehicles). Therefore, the development of a reliable screening method for liquid agents that are delivered in droplet form is needed. As a part of the U.S. Department of Defense's Next Generation Fire Suppression Technology Program (NGP), we are tasked to design, construct, and demonstrate a laboratory-scale apparatus that can perform the screening of liquid agents in a well-controlled experimental setting. Although the primary function of the apparatus is to screen liquid agents, the experimental facility is designed to be flexible enough to accommodate the screening of gaseous agents as well as solid particulates (with the addition of a powder delivery system), if desired. The liquid agent screening apparatus consists of a vertical wind tunnel, a burner, and a droplet generation device. The design and development of these components will be discussed in detail in the following corresponding sections.

* This research is part of the Department of Defense's Next Generation Fire Suppression Technology Program, (co-) funded by the DoD Strategic Environmental Research and Development Program.
† Contribution from the National Institute of Standards and Technology, not subject to copyright in the United States.

Interscience Communications Ltd.; National Institute of Standards and Technology; Building Research Establishment; and Society of Fire Protection Engineers; Swedish National Testing and Research Institute. Interflam '99. International Interflam Conference, 8th Proceedings. Volume 2. June 29-July 1, 1999, Edinburgh, Scotland, Interscience Communications Ltd., London, England, 1343-1348 pp, 1999.

EXPERIMENTAL APPARATUS

Wind Tunnel

A small-scale vertically upward open-circuit wind tunnel is used to provide uniform oxidizer flow to the cylindrical burner. Air is supplied to the tunnel via a frequency-controlled blower. This configuration not only allows for the delivery of a uniform flow of oxidizer to the burner at a low turbulence intensity but also assists in the delivery of liquid agent droplets to the flame. A schematic of the tunnel is shown in Figure 1. The total length of the tunnel from the entrance of the diffuser to the exit of the test section is approximately 1.2 m. The tunnel, except the test section, is made of clear polycarbonate and polymethyl methacrylate for visual observation of droplet transport toward the burner. The test section, with a cross section of 10 cm x 10 cm, is made of anodized aluminum with three observation windows. The burner is mounted across the test section, and the droplet generator is located in the settling section of the wind tunnel.

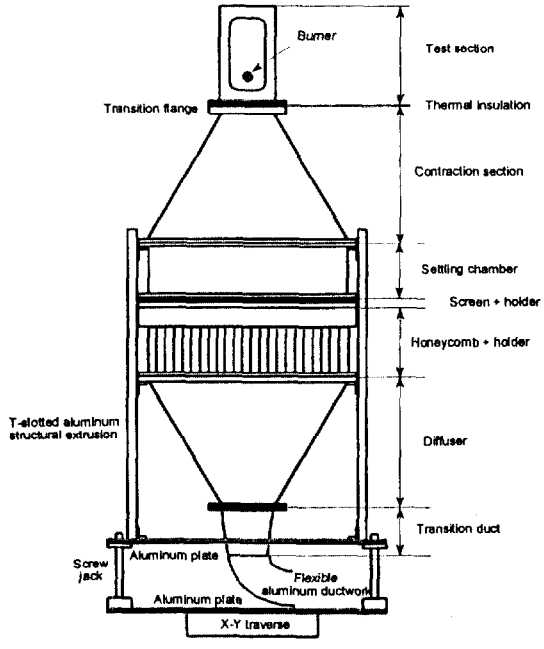

Figure 1. A schematic of the wind tunnel.

Burner

A cylindrical burner operated in a counterflow configuration is selected. This type of burner has been extensively used in the past to study flame extinction and suppression using inert gases[3], halons[4], and powders[4] (sodium bicarbonate and Purple K) due to the ease of maintaining a stable flame over a wide range of fuel and oxidizer flows and of introducing condensed phase materials in the carrier (air) stream.

The burner is a replaceable porous (20 μm pores) sintered stainless steel standard threaded cup filter with a length of 3.18 cm, an I.D. of 1.12 cm, and an O.D. of 1.58 cm. The advantage of this burner

design over those used in the past is that burner replacement can be easily performed if partial or complete clogging of the porous burner surface occurs. The burner is screwed onto an extended water-cooled insert through which fuel is injected. The water is used to cool the burner (to prevent damage to the porous surface structure) and the fuel (to prevent fuel pyrolysis prior to its ejection through the porous surface). A cut-away schematic of the burner interior is shown in Figure 2. The burner, together with the insert, does not span the entire test section of the wind tunnel. A cylindrical brass rod (same diameter as the burner) with internal water cooling is inserted from the opposite wall and is used as an extension so that the burner assembly can be treated as a single cylinder across the test section. The downstream 180° portion of the burner surface is coated with a thin layer of high-temperature resistant black paint in order to prevent fuel ejection into the wake region. The high pressure drop across the porous sintered surface assures a very uniform fuel flow over the burner surface. Propane is used as fuel, and its flow rate is regulated by a mass-flow controller.

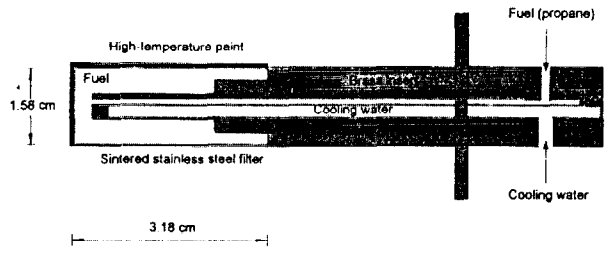

Figure 2. A cut-away view of the burner and its insert.

Droplet Generation Device

In the early development stage of the screening apparatus[5], a piezoelectric droplet generator was used to create liquid droplets (< 100 μm) from the controlled breakup of a liquid jet emerging from a sapphire orifice. However, clogging of the orifice constantly plagued the continuous operation of the piezoelectric droplet generator, aggravated by liquids with high loading of dissolved salts. Only distilled and de-ionized water and a few very dilute aqueous solutions have been successfully tested with the droplet generator[6]. A glass nebulizer is currently employed in the screening apparatus to generate a fine mist of droplets. This type of nebulizer has found applications in inductively-coupled plasma (ICP) atomic emission spectroscopy. A schematic of the nebulizer is shown in Figure 3. Aerodynamic break-up of a liquid stream issued from the capillary by high-velocity air causes the formation of a fine mist of droplets. Because of the differences in the droplet formation mechanisms, a relatively large opening (~ 100 μm) of the capillary in the nebulizer, compared to the sapphire orifice (~ 30 μm), can be used with a wide range of liquids, including those with a relatively high salt concentration. Fluid is fed to the nebulizer by a small, programmable syringe pump. Air is supplied to the shell of the nebulizer by a mass-flow controller. The air flow is set at 0.25 l/min, which is the highest flow that can be used without disturbing the flame at the burner. The resulting mist is entrained upwards toward the flame by the air flowing in the tunnel.

RESULTS AND DISCUSSION

For a given burner size, there are only two important parameters, fuel ejection velocity and air velocity in the wind tunnel, that govern the performance of the burner. Under certain flow conditions, a thin, laminar, two-dimensional blue flame is established at a distance from the forward stagnation region of the burner. An example is given in Figure 4(a). If the air velocity is increased with the fuel ejection velocity fixed, the flame slowly approaches the burner surface, and eventually the flame is

abruptly blown off from the stagnation region, and a wake flame, an example of which is shown in Figure 4(b), is established behind the burner. Figure 5 shows the operational boundary for the current burner. In the figure, each data point was obtained by maintaining a fixed fuel flow and increasing the air flow until blow-off occurred. The regions below and above the curve correspond to the existence of an enveloped flame and a wake flame, respectively. There is a critical air velocity above which a stable enveloped flame can no longer be established, irrespective of the fuel flow. This critical velocity depends on fuel type and burner diameter[7]. For our screening applications, the fuel flow is always fixed at 2 l/min, which corresponds to an ejection velocity of 4.2 cm/s. The transition from enveloped to wake flames, that is the air velocity at blow-off, is used as a criterion for screening the fire suppression effectiveness of various fire suppressants; the higher the air blow-off velocity, the less effective the fire suppressant.

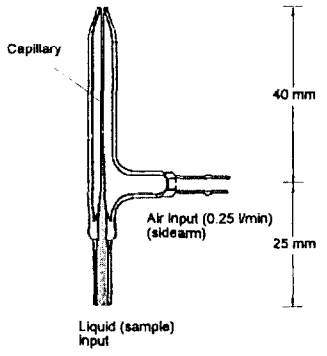

Figure 3. A schematic of an ICP nebulizer.

To demonstrate its flexibility and versatility, the apparatus was first used to screen three inert gases (argon, helium, and nitrogen) which were gradually added in the oxidizer stream until blow-off occurred. The relative fire suppression efficiency ranking of these three gases was found to be commensurate with that obtained from the cup-burner tests[5].

(a) (b)

Figure 4. (a) An enveloped flame and (b) a wake flame.

For screening of liquid fire suppressants, the air flow (with fixed liquid application rate and fuel flow) is gradually increased until blow-off occurs. Potassium lactate solutions were used as test fluids to evaluate the screening apparatus because these fluids have been found in preliminary testing to exhibit better fire suppression effectiveness than pure water[8]. Figure 6 shows the air velocity at

blow-off as a function of fluid application rate for water, 30 % (by mass) potassium lactate, and 60 % (by mass) potassium lactate. Several salient points are noted in the figure. As the fluid application rate increases, the air velocity at blow-off decreases. For a given application rate, the blow-off velocity for water is higher than the two potassium acetate solutions, indicating water is not as effective as the potassium lactate solutions. Based on the average blow-off velocities at 0.3 ml/min application rate, the 30 % solution is only about 1.2 times (~ 170 cm/s *vs.* ~ 200 cm/s) more effective than water, whereas the 60 % solution is about 1.5 times (~ 140 cm/s *vs.* ~ 200 cm/s) more effective than water. The 60 % potassium lactate solution is about 1.2 times (~ 140 cm/s *vs.* ~ 170 cm/s) more effective than the 30 % solution.

The tests reported in Ref. [8] using a small JP-8 pool fire and a commercial spray gun indicate that the 60 % potassium lactate solution (applied at room temperature) is about four times more effective than water based on the average extinguishment times (2.4 s *vs.* 9 s) of the fires. However, the fires and the sprays used in Ref. [8] were not well controlled and characterized.

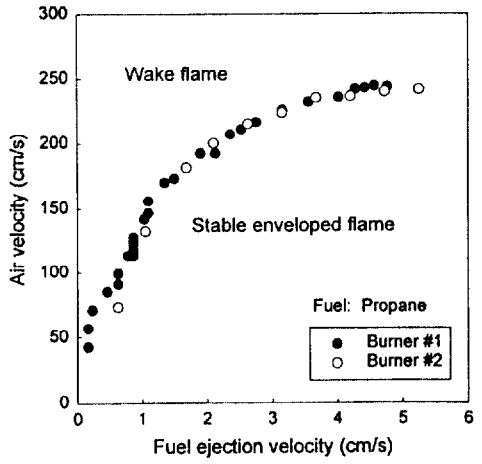

Figure 5. Flame stability diagram of the burner.

Our initial measurements of droplet size distributions at 2 cm above the nebulizer on the centerline using a Phase Doppler Particle Analyzer (PDPA) indicate that the Sauter mean droplet diameters (based on volume of the droplets divided by surface area of the droplets) vary only between 20 μm to 30 μm, irrespective of application rates (0.3 ml/min to 0.9 ml/min) and the fluids used here; this implies that the droplet size (when different fluids are used) is not influencing the ranking of fire suppression effectiveness in our screening apparatus. Figure 6 also demonstrates the ability of the apparatus to perform screening using only a small amount of fluid (less than 15 ml); this requirement is critical because potential new liquid agents may be synthesized and available in minute quantity for testing.

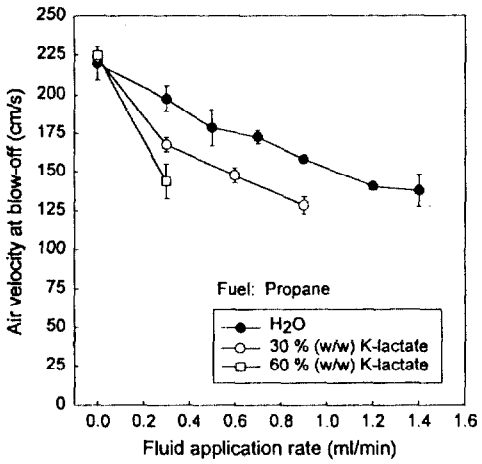

Figure 6. Blow-off velocity as a function of application rate for three fluids.

CONCLUDING REMARKS

An apparatus for screening liquid fire suppressants has been developed. The device is easy to operate and only requires a small amount of fluid to perform a test. The apparatus can also be used for screening gaseous agents. In principle, the device could be employed to screen powder agents by incorporating a (yet-to-be-designed) powder delivery system. The apparatus is currently used to examine aqueous solutions with other additives and potential new liquid agents. The nebulizer will be further characterized by expanding the range of the thermophysical properties using water with surfactants and viscosity modifiers. The droplet sizes and number densities at various locations near the flame will be assessed for uniformity using a PDPA.

REFERENCES

1. W.L. Grosshandler, R.G. Gann, and W.M. Pitts (eds.), NIST SP 861, U.S. Department of Commerce, Washington D.C., April 1994.
2. R.G. Gann (ed.), NIST SP-890 (Vol. I & II), U.S. Department of Commerce, Washington D.C., November 1995.
3. S. Ishizuka and H. Tsuji, Eighteenth Symposium (International) on Combustion, The Combustion Institute, pp. 695-703, 1981.
4. T.A. Milne, C.L. Green, and D.K. Benson, Combustion and Flame, **15**, 255-264 (1970).
5. J.C. Yang, M.K. Donnelly, N.C. Privé, and W.L. Grosshandler, Proceedings of Halon Options Technical Working Conference, Albuquerque, New Mexico, May 1998.
6. J.C. Yang, M.K. Donnelly, N.C. Privé, and W.L. Grosshandler, Proceedings of the 5th ASME/JSME Joint Thermal Engineering Conference, San Diego, California, March 1999.
7. H. Tsuji and I. Yamaoka, Eleventh Symposium (International) on Combustion, The Combustion Institute, pp. 979-984, 1967.
8. A.E. Finnerty, R.L. McGill, and W.A. Slack, ARL-TR-1138, U.S. Army Research Laboratory, Aberdeen Proving Ground, July 1996.